ORION

USER MANUAL

Introduction and Product Overview

1.0 The Chassis system - description

1.0 The Orion chassis system

2.0 Master section - description

2.1 Solo section
2.2 CRM section
2.3 Oscillator section
2.4 Communications section
2.5 Auxiliary send masters
2.6 Studio section / Phones section
2.7 Master inputs / outputs
2.8 Master meters / Channel meters / Phase meter

3.0 "LCRS" in-line module - description

3.1 Input section
3.2 Equalizer section
3.3 Auxiliary send section
3.4 Monitor section
3.5 Floating Subgroup section
3.6 Channel assign / Fader section
3.7 Automation
For inputs / outputs - see 4.7

4.0 Standard in-line module - description

4.1 Input section
4.2 Equalizer section
4.3 Auxiliary send section
4.4 Floating Subgroup System
4.5 Monitor section
4.6 Channel assign / Fader section
4.7 Inputs / outputs

5.0 Dual Stereo Aux Return module - description

5.1 Input section
5.2 Equalizer section
5.3 Aux send section
5.4 Floating Subgroup System
5.5 Channel assign / Fader section
5.6 Inputs / outputs

6.0 Optional Patchbay - description

6.1 Patchbay - points

7.0 Instructions for operation

7.1 The Tracking session
7.2 The Playback session
7.3 The Overdub session
7.4 The Remix session
7.5 The MIDI or Virtual Session

8.0 Installation - electrical

8.1 Local Electrical Voltage
8.2 Electrical Wiring

9.0 Installation - audio

9.1 Interface with Power Amps
9.2 The Initial Hook-up
9.3 Shields & Grounds of Equipment

10.0 Master Section Connectors

10.1 Connecting the Master Module # 1
10.2 Connecting the Master Module # 2
10.3 Connecting the Master Module # 3
10.4 Connecting the Master Module # 4
10.5 Connecting the In-line / LCRS Module

11.0 Troubleshooting and servicing

11.1 Troubleshooting
11.2 Removing a module
11.3 Patchbay - servicing

12.0 Specifications

Letter from the Prez

Dear Orion owner,

Thank you for selecting the D&R Orion series.

The Orion was created using the latest in computer aided design and assembling technology and incorporates the most advanced circuit components available which results in the Orion being another D&R product unsurpassed in the electronics industry.

We value your suggestions and would appreciate you taking the time to complete and return the questionnaire included at the front of this manual (once you become familiar with your Orion). We listen and learn from your comments and you can be assured that our research and development department will take your comments very serious.

Built to the highest standards, we are confident that the Orion will help produce "state of the art" recordings for many years and wish you much success.

With kind regards,

D. de Rijk
President, D&R Electronica b.v.

RAISING
THE
STANDARD

Orion Recording Console

The D&R Orion series is a balanced, 8 or 16 buss, in-line format recording and mixing console designed to take the central role in a recording, mixing, or post production facility.

The Orion is completely modular and can be configured to precisely suit your particular system requirements. Due to the fact that all inputs and outputs can be connected using the individual module and master section connectors, the Orion patchbay is entirely optional. When the Orion patchbay is installed, the Orion can be interfaced using 25 pin sub D multipin connectors. If you have your own patchbay or perfer to wire your own, individual input / output connectors (rear of meterbridge) can be used for the interface. If you ordered your Orion short-loaded and without the patchbay, you may install the patchbay at a later date.

To become completely familiar with your Orion and gain the maximum benefit from its use, we recommend that you read this manual thoroughly. It will provide important information about all aspects of the Orion including; installation, operation, and servicing.

If we can be of any assistance to you, don't hesitate to call.

Head Office / Factory:

D&R Electronica B.V.
Rijnkade 15B
1382 GS Weesp
The Netherlands

Tel: (-) 31 2940 18014
Fax: (-) 31 2940 16987

THE CHASSIS SYSTEM

1.0 The Orion Chassis System

The Orion is available in three frame sizes; 30, 38, and 51 (larger frames can be special ordered). The basic frame has four blank modules, two are located on the extreme left and right of the frame and two more are on the left and right of the master section. The extreme left and right blanks cannot be used for input modules as they conceal mechanical construc- tions, however, the blanks on either side of the master can be replaced with input modules. A heavy duty rack-mount power supply, master modules, and internal cable harness are included.

***Note**: Due to the LCRS module and standard in-line module being the in-line design format, we will refer to both as in-line modules. As always, with D&R you can pick and choose how many of any of the three modules you want and where you would like them in the frame.*

The frame 30 will fit 32 input modules (in-line, or dual stereo modules), 4 master modules, and 2 blank modules. The standard configuration has (from left to right) 24 in-line modules, 4 master modules, and 6 duel stereo return modules. Custom configurations are available at no extra charge.

The frame 38 will fit 40 input modules (in-line or dual stereo modules), 4 master modules, and 2 blank modules. The standard configuration has (left to right) 24 in-line modules, 4 master modules, 8 in-line modules, and 6 dual stereo return modules. Custom configurations are available (no charge).

The 51 position frame will fit 40 input modules (in-line or dual stereo modules), 4 master modules, patchbay, and 2 blank modules. The standard configuration has (from left to right) 24 in-line modules, 4 master modules, 8 in-line modules, 6 dual stereo return modules, and patchbay. Custom configurations are available at no extra charge. The 51 position frame can accept up to 54 input modules if the patchbay is not utilized.
Both the master section and patchbay can be installed wherever most suitable, but the request must be made at the time of ordering. If your requirements are for your patchbay to be remotely mounted, ask D&R for a custom quote. The Orion is available with or without the pedestal base and stabilizing beam. If ordered with console, the pedestal is not assembled for shipping. Assembly takes approximately twenty minutes.

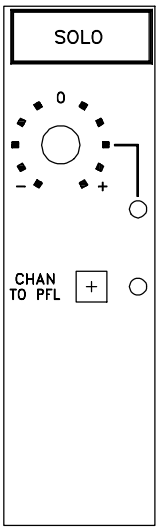

2.0 Master section - description

The Orion has four master modules mounted in a single front panel . All inputs and outputs are located on the back of the meter bridge. The paragraphs below give a description of each module section.

2.1 Solo section

The Solo section has a master volume control with a center detent for nominal levels and a **CHAN**nel to **PFL** (pre-fade listen) switch with an LED indicator mounted. When this switch is in the up position, all solo switches on the input modules are in the "stereo-in-place" mode when activated. With this switch in the down position, any solo depressed would be in pre-fade listen mode. An LED indicator is also fitted next to the solo level control to show when a solo circuit is activated.

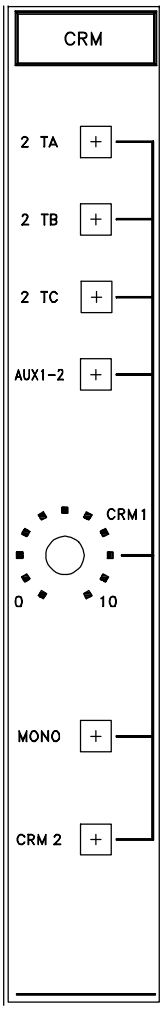

2.2 CRM section

The **CRM** (control room monitor) section contains the electronics for monitoring all signal paths in the Orion.

CRM Source switching

From the top of this section, there are the four CRM signal sources. With all these switches in the up position, the CRM will monitor the stereo main outputs which is the sum of all the monitor sections (assigned on LCRS), Left / Right routing switches in the input / output modules, and all (assigned) stereo inputs from the dual stereo modules. The Orion has three dedicated balanced +4 dBv or -10 dBu tape machine returns which can be wired to the outputs of stereo master machines, cassette machines, CD players, or DAT recorders or to the Orion patchbay. Utilizing any of these switches enables playback or post tape monitoring of a master mix.

Aux 1-2 (7-8 if fitted with LCRS modules) can be monitored in stereo to allow the building-up of a stereo cue mix for the headphone system through the control room monitors.

CRM level

The **CRM** level controls the output level to the control room monitors amps. The Orion has two CRM systems intended for use with large monitors and nearfield monitors which are switchable via the **CRM 2** switch. We advise that nearfield monitors be wired to the CRM 2 output since the communica- tion takes place over this monitor while dimming the main monitor.

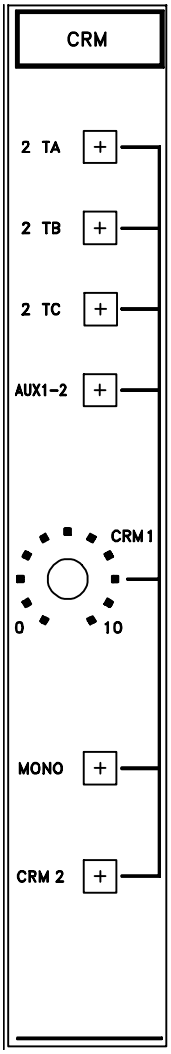

MONO

The Mono switch allows the user to listen for any out-of-phase signals or merely used for monitoring your mix in mono.

Faders

Located in the bottom of the left two master modules (not drawn) are two 100mm mono faders which control the main stereo mix busses.

2.3 Oscillator section

A three frequency, low distortion, phase shift type oscillator is fitted. The three frequencies are; 100Hz, 1kHz, and 10kHz. Each frequency has its own front panel alignment trimmer and overall level control to adjust the oscillator for precise alignment of the console and tape machines. The level ranges from -35 dB to +20 dB with a detented mid-position calibrated at +4 dBv. The oscillator is routed to the stereo mix busses and switchable to the GROUPS.

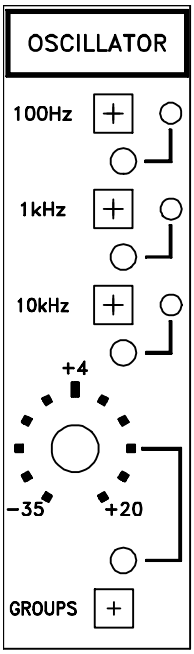

NOTE: The CRM will dim 20dB when the oscillator is active.

The meters on the Orion are peak reading meters and will read -6 dB when a sine wave with a +4 dB output level is sent to the meter. Measuring the +4 dB output level of the channel or master with a AC voltmeter would produce a 1.22 volt reading. The LED meter would actually be reading -6 dB on the scale. When monitoring "program" material, you will see higher levels on the peak reading meters. A pair of analog VU meters are available as an option to fit alongside the master peak meters.

Note: When aligning your tape machines to the peak meters on the console, do not set the peak meters to "0". The meters should be set to -6 on the console meters. If analog VU meters are used on the master section, they would be set to "0".

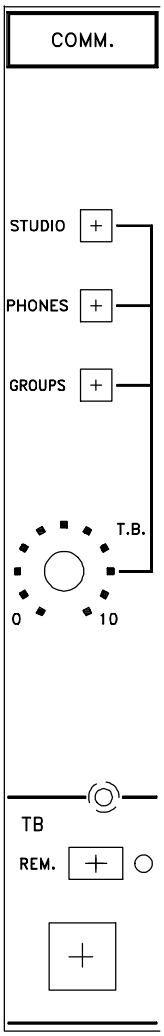

2.4 Communications section

The communications section allows all communication functions from the control room to the STUDIO, PHONES, and GROUPS. Each buss has its own assignment switch and is feed via the T.B. control and built-in condenser mic.

The T.B. REM. (remote) switch is for locking in the talkback allowing the engineer or producer to carry on a two way conversation with the studio from remote areas in the control room. When depressing this push-on push-off switch, you can communicate without holding down the talkback switch.

The talkback switch is a momentary type which allows you to talk to the head**PHONES**, **STUDIO** speakers, and 8 GROUP outputs as well as the "Floating Subgroup System". The stereo phone jack sockets located above the aux master sections are for checking (on stereo headphones) the mix being sent to either output section.

2.5 Auxiliary send masters

The eight auxiliary master sections are identical in function. Mounted in the first module are aux sections 1, 3, 5, & 7 and mounted in the second module are aux sections 2, 4, 6, & 8. Each Aux master pot controls the sum of all channel or monitor aux send busses. The solo switch sends the (post fader) aux buss signal to the control room monitors. The associated LED lights indicating the activated solo switch. When using any aux send buss, turn the aux master full clockwise for the correct amount of output. If the input level of your effects device seems to be low, make sure the input gain on any module you are sending from is adjusted correctly. In order to adjust this control, refer to section 4.1 of this mauual.

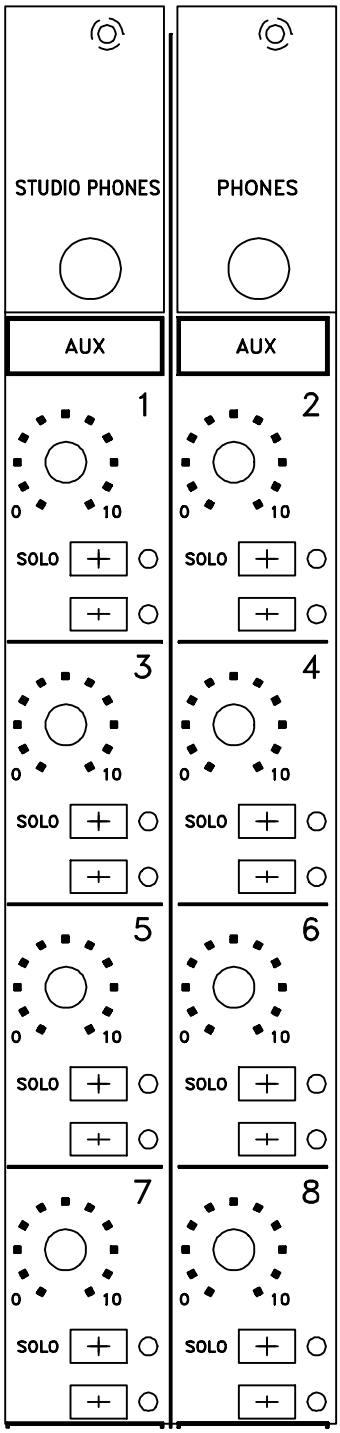

2.6 STUDIO and PHONES section

The STUDIO section and PHONES section performs in a similar way to the CRM module, however, the signals are sent to the studio or phones amp from the CRM or Aux 1 & 2. If you press only the Aux 1 switch, you will hear only the Aux 1 buss (in mono) through the studio speakers (or the headphones) and if you press only the Aux 2 switch, you will hear only the Aux 2 buss (in mono) through the studio speakers (or headphones), however, if you press both Aux 1 and Aux 2 switches you will hear Aux 1 in the left studio speaker (or headphone) and Aux 2 in the right studio speaker (or headphone). When pressing both switches, you can have a stereo mix playing through the studio speakers (or stereo headphones).

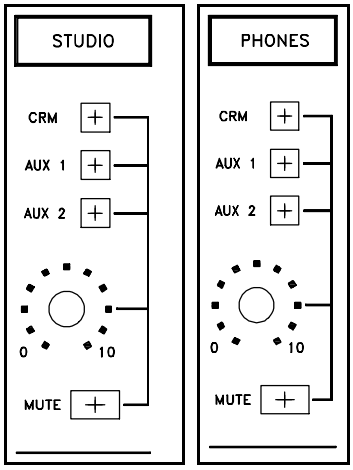

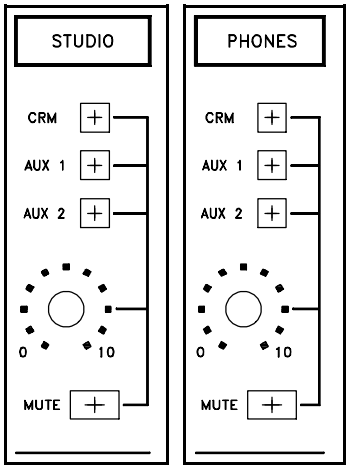

Also fitted in this section is a mute switch and level control with level ranges up to a balanced +4 dB nominal level (+26 dB maximum). The mute switch is used to mute the output of the studio or phones module. The studio output section can be used for feeding a completely separate mix to a second set of studio headphones.

2.7 Master Inputs/Outputs

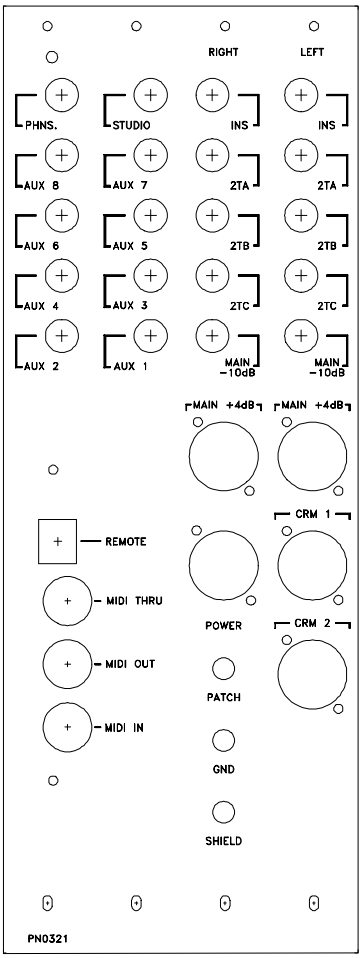

The Orion has two methods of interfacing with external equipment such as two track master machines, signal processors, headphone amps, and power amps. Interfacing is possible using the connectors on the master back panels, through 25 pole sub D male connectors (if utilizing the optional patchbay), or a mixture of both. Listed below are all inputs and outputs for the four master modules. The next four drawings and paragraphs describe and explain the backplate and all connectors.

Master module # 1 & 2 (CRM & SOLO and OSCILLATOR & COMM.) This double backpanel houses (from top to bottom) the right and left master insert sends & returns, two track A, B, & C right and left playback inputs (from two track machines), -10 dBv right and left outputs, and +4 dB balanced right and left outputs fitted on male XLRs. Also fitted on male XLRs are CRM 1 & 2 outputs. The ground terminals and power supply connector are located on this backplate as well.

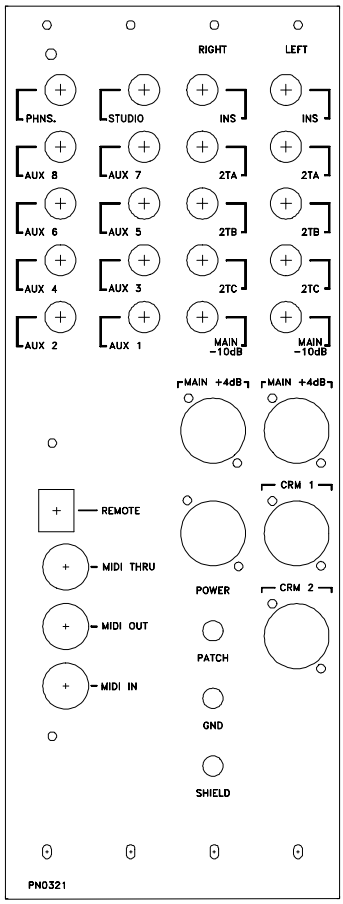

Right and left master insert in and out.

Right and left two track A (playback)

Right and left two track B (playback)

Right and left two track C (playback)

Right and left -10dBv main outputs

Right and left +4 dB balanced main outputs

Power supply connector / Control room 1 output

Ground terminals and Control room 2 output

Master module # 3 & 4 (Aux masters 1 through 8 and Studio & phones sections). The connectors on this module backplate are the studio & phones stereo outputs and the balanced Aux 1 through 8 master outputs. The Phones jacksocket is a stereo 1/4" output which should be wired to the inputs of a stereo power amplifier intended to drive the headphones in the studio. The Studio jacksocket is a stereo 1/4" output which should be wired to the inputs of a stereo power amplifier intended to drive the Studio playback speakers.

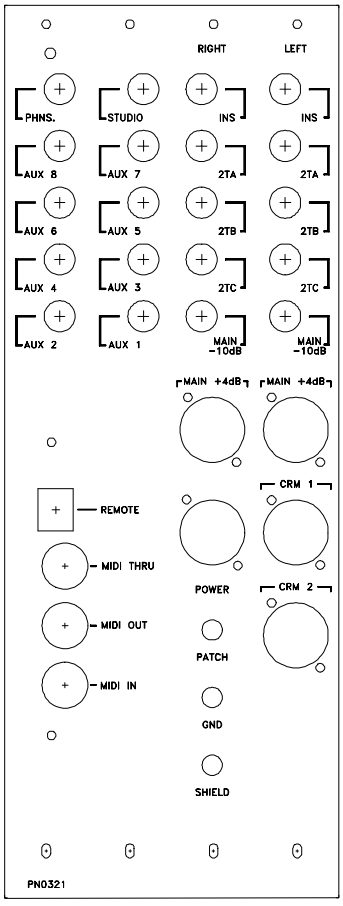

Phones output and Studio output

Aux 8 output and Aux 7 output

Aux 6 output and Aux 5 output

Aux 4 output and Aux 3 output

Aux 2 output and Aux 1 output

Automation remote control

MIDI in, out, and thru din sockets

Aux sends 1 through 8 are used for sending signals within the console to eight different signal processors such as digital reverbs. These outputs are balanced (ground compensated).

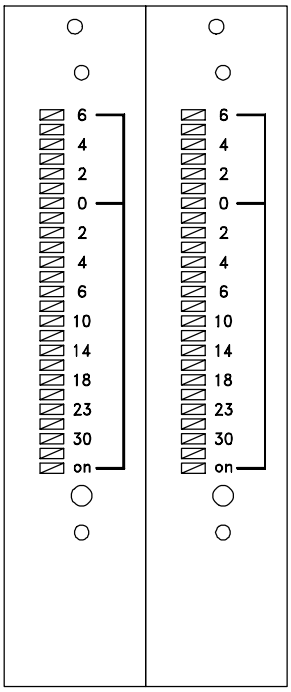

2.8 The Master, Channel, & Phase Meters

Master Metering

The Orion master is fitted with peak reading, high resolution, LEDbar meters with attack and release times which conform to world standards. The attack is 10msec. for a 20 dB range and the release is 1.5msec.

NOTE: Peak reading meters give a reading 6 dB below the actual level when using a sine wave. For example, +4 dBu at the output connectors would give a reading of -6 dB on the meter using the oscillator.

If U.K. reading ledbars are ordered, they will have attack and release times of 300msec. and a +4 dBu level on the output connectors will give a 0 dB reading on the meter.

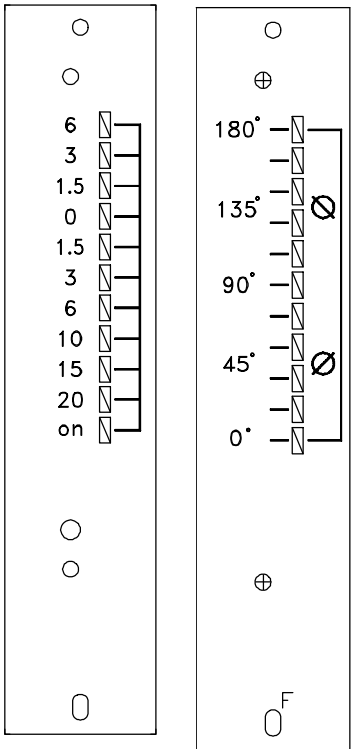

Channel metering

Each in-line channel is fitted with peak reading, eleven segment LEDbar meters mounted in the meter bridge. The attack and release times conform to world standards. The attack is 10msec. for a 20 dB range and the release is 1.5msec.

NOTE: Peak reading meters give a reading 6 dB below the actual level when using a sine wave. For example, +4 dBu at the output connectors would give a reading of -6 dB on the meter using the oscillator.

Phase Meter

Fitted in the meterbridge is a phase corelation meter. This meter is used for checking for phase cancellations in the stereo mix or when miking anything in stereo. It is normal for your meter to display up to 90 degrees when monitoring in stereo.

3.0 The LCRS Module - description

The Orion LCRS module is a basic input / output design (in-line) whereby all signal flow takes place from the microphone to the multitrack. Each LCRS module is shipped with an 11 segment LED bargraph meter. The following sections explain the many functions and features of this module.

3.1 Input section

The input section controls all incoming signals such as microphones, keyboards, or any line level device. Fitted at the top of the module is a **48V** phantom power switch for powering condenser microphones or active direct boxes.

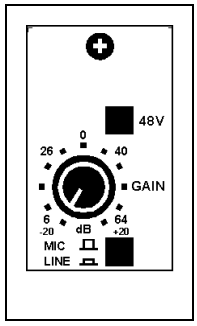

The **GAIN** control is actually one knob which turns two pots adjusting two sets of electronics. If the **MIC/LINE** switch is in the up position, the **GAIN** control will adjust the microphone input and if the **MIC**/**LINE** switch is in the down position, the **GAIN** control will adjust the line input level. In order to make it more accessible, the PHASE switch is located next to the monitor fader. It is used for reversing the polarity (phase) of the microphone *and* line input.

3.2 Equalizer section

Just below the input section is the four band fully sweepable **Ext**ended Range **"Hi-Def"** (high definition) equalizer. The **HF** (high frequency) band has a boost or cut of 16 dB and is sweepable from 4kHz to 22kHz and is a shelving type. The **HMF** (high mid freq.) band sweeps from 600Hz to 15kHz. A **MIDS TO MON**itor switch allows the two sweepable mids to be moved to the monitor equalizer creating a full four band sweepable equalizer in the monitor path. The **LMF** (low mid frequency) band sweeps from 40Hz to 1kHz. Both mid freq. bands are peak/dip types with a boost or cut of 16dB. The **LF** (low frequency) band starts at 10Hz and sweeps out to 500Hz. It is a shelving type with a boost or cut of 16dB. A high pass filter switch is fitted just below the equalizer to allow the user to cut the low frequencies below 100Hz. It is a 12dB per octave Butterworth type. An **EQ** in/out switch completes the channel equalizer section.

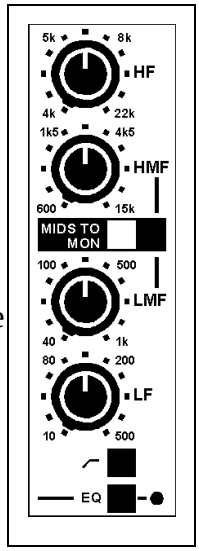

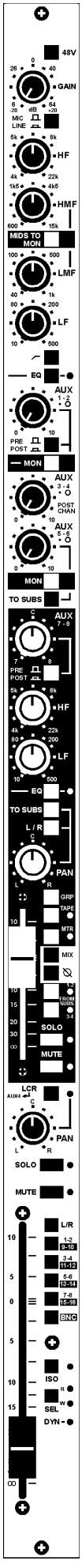

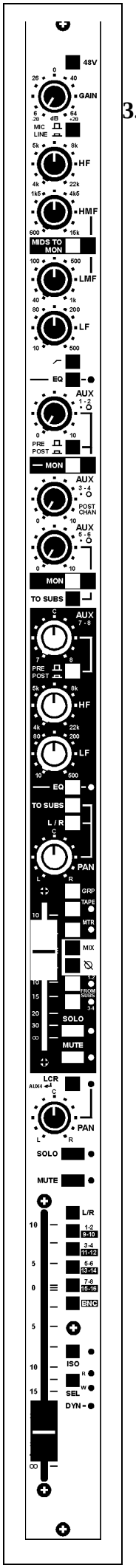

3.3 Auxiliary send section

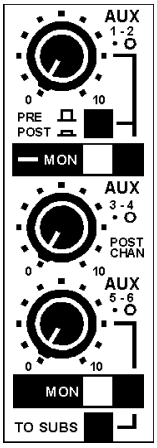

Each LCRS module has 8 discrete aux sends. Aux send 1 & 2 are fed from either the channel path or the monitor path and switchable pre/post fader.

Aux 3 & 4 are always fed post fader from the channel path.

Aux 5 & 6 are post fader fed from channel or monitor. Aux 5-6 sends can be sent to the 16 busses (to subs) to extend the 8 aux sends to 24 aux send busses.
When pressing the Aux 5 & 6 **TO SUBS** switch, Aux 5 & 6 sends will take priority over the monitor and channel bussing.

3.4 Monitor section

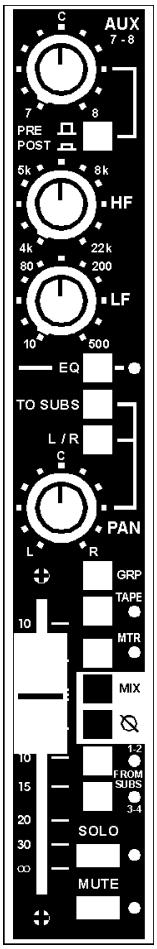

Aux 7 & 8 are always in the monitor path with level and pan control and are pre/post fader switchable.

The **Monitor Equalizer** section is a shelving type with the same extended range as in the channel path. Sweepable from 10Hz to 500Hz and 4kHz to 22kHz in two bands, this **"Ext-Hi-Def"** equalizer has an ultra transparent quality to its sound. The two mid bands of the channel equalizer can be switched into the monitor equalizer making it full four bands.

An **EQ** in/out switch allows for easy comparisons.

The monitor section can be assigned to the 16 busses for maximum tracking flexibility. If channels are assigned to the 16 busses and you press the monitor **TO SUBS** switch, the monitor bussing will take priority over the channel bussing.

The **L/R** switch allows the monitor panpot to be assigned to the stereo mix buss. The monitor **PAN**pot pans between the left and right stereo mix busses.
The GROUP (**GRP**) switch inserts the monitor fader into the group output buss in the associated channel and allows the control of a output using the monitor fader as a sub group control.

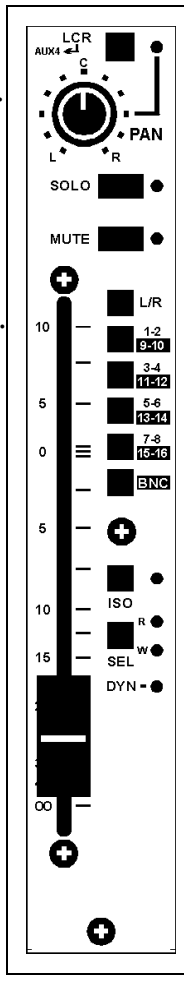

The **Tape** switch selects the monitor to listen pre or post multitrack. The LED bargraph meter normally follows the tape switch but can be switched (**MTR**) to follow the input signal post channel (balanced) insert.The **MIX** switch swaps the mic / line into the monitor and tape into the channel (from tracking to mixdown mode) on individual modules.

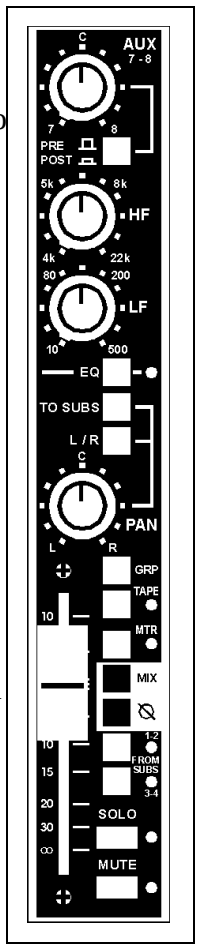

The **Phase** switch reverses the phase for both mic *and* line inputs.

3.5 Floating Subgroup System

Located in the lower part of the monitor section, the **"Floating Subgroup System"** is one of D&R's most unique features. Although the Orion LCRS has 16 conventional busses, the **FSS** allows the user to buss any input (or any amount of inputs) to those tracks above 16 without having to use the patchbay. As an example, if you have a 32 track tape machine and want to buss some inputs in stereo to tracks 31 & 32, you would assign and pan between busses 1 & 2 (or 3 & 4) on all desired inputs and then go to modules 31 & 32 and press **FROM SUBS** 1 & 2 (or 3 & 4) on both from sub sections. Now a stereo mix of all assigned channels will feed tracks 31 & 32 through the outputs of modules 31 & 32. At the same time, the input sections, eq sections, and channel assign sections of modules 31 & 32 can be used for other inputs.

The Monitor section has two **SOLO** modes available, PFL or Solo in Place. The SOLO switch has an LED as an indicator.

Fitted below the solo switch is an automated **MUTE** switch. **MidiFade** (D&R's midi sequencer controlled automation) and **PowerVCA** (D&R's SMPTE based automation) will control this mute. The **MUTE** switch has an LED indicator.

3.6 Channel assign / fader section

The **LCR** panpot allows for easy surround sound mixes when needed or can be used as a normal panpot when the **LCR** switch is not activated. When active, the center output of the panpot will feed the Aux 4 buss directly creating a third channel needed for the center of Surround mixing. In this condition, the aux 4 send pot (on this channel) is not active.
The surround sound can be fed from aux three if a four channel surround mix is required. If a six channel surround mix is required, aux 5 could be used as left surround and aux 6 for right surround or the stereo aux 7-8 could be used for the left &
right surround sounds. If six channel surround is required, aux 3 would be the sub woofer send.

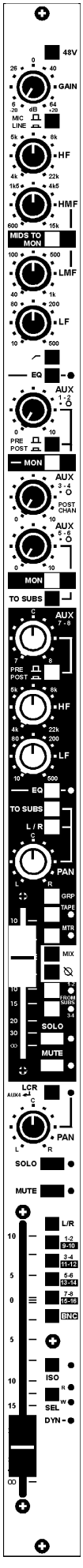

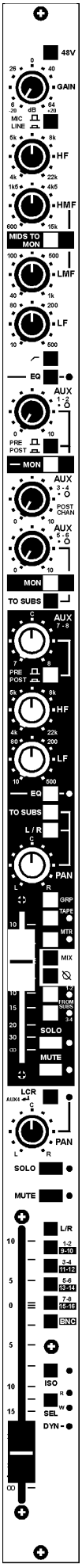

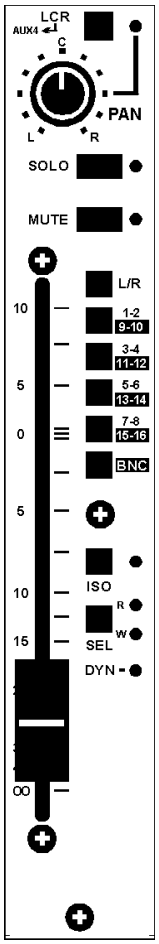

The channel **SOLO** switch allows for both **PFL** and **Solo in Place** listening and has an LED indicator.

The channel **MUTE** switch fitted below the solo switch is an automated **MUTE**. **MidiFade** (D&R's midi sequencer controlled automation) and **PowerVCA** (D&R's SMPTE based automation) will control this mute. The **MUTE** switch has an LED indicator.

The channel can be assigned to the left / right stereo mix busses by pressing the **L / R** switch.

Assignment to the 16 busses is performed by pressing any or all of the 1 through 8 buss switches. The **BNC** switch bounces between busses 1 through 8 and 9 through 16. The **"Floating Subgroup System"** is routed through the first four busses.

When you press the **ISO** switch on this module, the internal high quality VCA can be individually switched out of the signal path for "audio purists".

The SEL switch changes the automation modes from ISO (VCA in, but not controlled by the computer) **R**ead mode, **W**rite mode, and **U**pdate mode (relative).

An external sequencer can control the internal automation hardware if the optional D&R **PowerFade** automation hardware and software is <u>not</u> purchased.

This module can accept a dynamics option which will be introduced later. The **DYN**amics option will require some hardware and software. Planned for release in late '95, the **DYN**amics option will have compressors, limiters, and gates available.

3.7 Automation

The Orion LCRS module comes standard with part of the hardware for **MidiFade**, a MIDI based VCA fader automation or D&R's **PowerVCA** SMPTE based automation system. Channel faders, channel mutes, and monitor mutes are automated in either system with the addition of the optional

LCRS Module....continued

Automation **CPU** with remote and one 8 channel **Multiplex** card for every eight LCRS modules to be automated. If you start with D&R **MidiFade**, D&R **PowerVCA** software and hardware can easily be installed into your 486/66 IBM (or clone) personal computer. After market automation systems can be installed at D&R or in your studio by a certified technician.

Note: As with all console manufacturers and after market automation systems, it is best to have the automation installed by the console manufacturer or automation factory trained technicians.

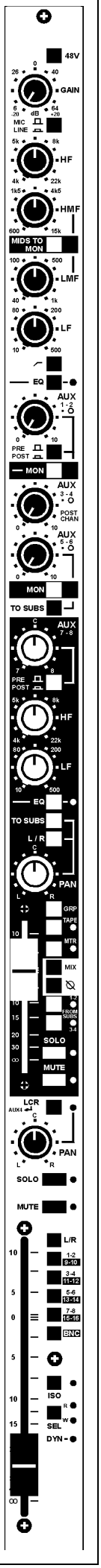

4.0 The In-line module - description

The Orion in-line module is a basic input / output design whereby all signal flow takes place from the microphone to the multitrack. Each in-line channel is shipped with an 11 segment LED bargraph meter. The following sections explain the many functions and features of the in-line channel.

4.1 Input section

The input section controls all incoming signals from microphone and line inputs.

A **+48V** phantom power switch for condenser microphones or direct boxes can be silently switched in or out of the circuit.

Phase is used to reverse the phase of any mic / line input coming from a mike or signal that may be out of phase with other mics or signals. A successful method of checking for "out of phase" signals is to depress the mono switch on the master section and listen closely to the mix. If an unexpected sound is heard or if something appears to be missing from the mix, depress the phase switch for those channels suspected to be in error. If the sound improves, then that channel was out of phase with the others.

When the **GAIN** control is accurately set, it is possible to achieve the very best signal to noise ratio and maximum headroom required for high quality recordings. This control is for adjusting the line and mic inputs (with seperate elec- tronics), although only one knob adjusts the dual pot.

LINE switches the microphone input to line input on the channel. The line has its own balanced input amp and is controlled by the active (dual) gain control.

MIX, (the record / mix status switch) selects the basic signal path in the module. When in the record mode ("up" position) the mic / line input signal is routed through the channel path with or without equalization and / or aux sends and then to the long fader and channel panpot. It can then be sent to the main Left / Right bus and/or be assigned to the multitrack busses. With the mix switch in the "up" position, the multitrack outputs are heard through the monitor section. When in the mix mode ("down" position) the channel signal (mic / line) is rerouted to the monitor section (light colored), and the tape return input is rerouted to the channel path.

The **TAPE** switch allows you to choose from where the monitor gets its signal. In the up position (source), the channel fader feeds the monitor through summing amps 1-8. For channel selections above 8, the channel fader will feed the monitor directly. In the down position (tape), the tape return (monitor in) feeds the monitor signal path.

4.2 Equalizer Section

This four band semi parametric equaliser is unique in its design. There are four bands, the high and low are sweepable frequency with shelving characteristics with a boost or cut of 16 dB. The two mid bands are sweepable with a boost or cut of 16 dB and are bell curve characteristics. The HMF (High / Mid Frequency) and LMF (Low / Mid Frequency) can be switched into the monitor path.

The **100 Hz Highpass filter** is a fixed 9 dB per octave Butterworth model which reduces low frequency noise effectively and musically. It can be switched on or off in the channel path.

The **HF** (high frequency) section is a varible frequency shelving type, sweepable from 4,000 Hz to 20,000 Hz with a maximum boost or cut of 16 dB.

The **LF** (low frequency) section is a varible frequency shelving type, sweepable from 20 Hz to 500 Hz with a maximum boost or cut of 16 dB.

The **HMF** (High / Mid Freq.) section has level and frequency controls with varible frequency ranges from 600 Hz to 15,000 Hz and has a maximum boost or cut of 16 dB. The bandwidth has a Q factor of 1.5.

The **LMF** (Low / Mid Freq.) section has level and frequency controls with varible frequency ranges from 40 Hz to 900 Hz and has a maximum boost or cut of 16 dB. The bandwidth has a Q factor of 1.5.

The HMF and LMF bands can be switched in or out of the channel and / or monitor circuit paths by pressing the MF to MON switch. If the equalizer is only partly inserted in a signal path, the equlizer (EQ) switch has priority over the monitor switch. All level controls are center detented making neutral positions easy to establish.

All frequency ranges have been carefully selected following extensive examination of all types of music (and noise). Test comparisons of other equalizers helped the D&R design team to create an equalizer that sounds very musical , but at the same time, raising the standard in specs and sound quality. Noise and distortion are kept to an absolute minimum.

4.3 Auxilliary Send Section

The Orion has eight auxilliary send busses. While in the tracking session, some aux sends are used for feeding the headphones and some are used for effects sends. During the mix session, all aux sends are used for effects sends.

Auxilliary sends **1&2** are on dual concentric controls. The top control is the send control for aux 1 and the bottom control is the send for aux 2. These Aux busses are normally used for stereo headphone sends in the tracking session.

Aux 3&4 are also on dual concentric controls. The top control is Aux 3 and the bottom control is Aux 4.

Aux sends 1 - 4 can be fed from either the channel path or MONitor path and are PRE / post switchable.

Auxilliary **5-6** are switchable to **Aux 7-8** busses.

4.4 Floating Subgroup System

The **"Floating Subgroup System"** is one of D&Rs most unique features. Although the Orion has 8 conventional busses, the FSS allows the user to buss any input (or amount of inputs) to those tracks above 8 without having to use the patchbay. As an example, if you have a 32 track tape machine and want to buss some inputs in stereo to tracks 31 & 32, you would assign and pan between busses 1 / 2 (or 3 / 4) on all desired inputs and go to modules 31 & 32 and press FROM SUB 1-2 (or 3-4) on each from sub section.

Now a stereo mix of all assigned channels will feed tracks 31 & 32. The **"Floating Subgroup System"** can be used for 48 and 64 tracks as well. The Orion series bussing is only limited by the amount of input / output channels in any given frame. The FSS is one of the most misunderstood features, however, once understood, it can be the most used and appreciated feature in the Orion.

4.5 Monitor Section

The monitor section is the second signal path in the Orion in-line channel. It has its own volume control, panpot, and mute & solo switches as well as a Group switch and fader reverse switch.

In record mode (the mix switch in the up position), the monitor section is fed by either the tape return or group output (tape return or tape send). In mix mode (mix switch depressed), the monitor section is fed by the mic / line input and the tape return now moves to the channel and is controlled by the long fader.

Two mid bands of the equalizer can be inserted into the monitor section. This feature makes a fully functioning input usable in the mix mode for signals other than the channel signal. Channel and monitor paths can have either tape return or mic / line inputs with a two band equalizer (on each) at the same time.

The **GRP** (group) switch inserts the monitor pot into the output summing amps of that particular channel. All relevant functions of the monitor section are also inserted. The stereo solo-in-place or pfl (pre fade listen) solo system and mute can be used on this group fader as well as auxilliary sends and equalizer, but control of the monitor signal path is obviously lost, however is still monitored. The mix channel status switch has no infuluence on the group switch.

The monitor pot and channel fader can be reversed (REV) when use of the fader for monitoring during recording is preferable. All functions such as assigned Aux sends, solo, and mute functions stay in their normal signal path. Only the fader and monitor pot are electronically reversed.

The **SOLO** switch has two modes, pfl (pre fade listen) or a "destructive" stereo solo-in-place system. Master status
switching (located in the master section) selects the status of "solo- in-place" or "PFL" mode for the entire console. When activating any solo switch in the pfl mode, it will send the prefader signal of the monitor section to the CRM speakers in mono. In the solo in-place mode, the post monitor panpot signal is heard (where panned in stereo), and all other channels are muted within the stereo mix buss. A solo indicator LED is fitted next to the solo switch.

The **MUTE** system is designed around a special soft-muting integrated circuit, completely click-free. A mute indicator LED is fitted next to the mute switch.

NOTE: Always make sure that unused monitor sections are muted as the unterminated inputs will degrade the excellent low noise performance of the mixing amps.

4.6 Channel assign / Fader section

The Channel assign section allows the user to assign to any of the 8 busses as well as the "Floating Subgroup System". The routing switches buss to the 8 multitrack output busses using four pushbuttons. With each switch routing to a pair of summing amps, you have the choice of assigning to the odd or even amp using the channel panpot.

The **MIX** switch (assign section) assigns the channel panpot to the stereo mix buss while the channel pan control pans the signal between the main stereo mix **L / R** busses and / or the odd and even multitrack summing busses if assigned.

The summing amp and internal structure yields the Orion's extremely quiet and distortion free sound, therefore a direct button to bypass the amps is not necessary. Every channel is individually assigned to the multitrack input which allows for tracking to be simple and consistant.

The **SOLO** switch has two modes, pfl (pre fade listen) or a "destructive" stereo solo-in-place system. Master status switching (located in the master section) selects the "solo in-place" or "PFL" mode for the entire console.

Activating the solo switch in the pfl mode will send the prefader signal of the channel section to the CRM speakers in mono. In the solo in-place mode, the post channel panpot signal is heard where panned and in stereo and all other channels are muted within the stereo mix buss. A solo indicator LED is fitted next to the solo switch. The solo LED has two functions; when in the solo mode it is a solo indicator and when that channel is not soloed, the LED is a post EQ peak indicator for the channel input.

The **MUTE** system is designed around a special soft-muting integrated circuit, completely click-free. A mute indicator LED is fitted next to the mute switch.

NOTE: Always make sure that unused channel sections are muted as the unterminated inputs will degrade the excellent low noise performance of the mixing amps.

Fader section

The Orion has a high quality 100mm fader. Alps or P&G faders are optional. You can order either the PowerVCA Automation (D&R's VCA fader & mute automation), PowerFade (D&R's moving fader automation), V/Desk, Uptown, Tetra, or any other after market automation system. Any of the above automation systems can be built-in at the factory or installed later. If you choose to add automation later, it is always best to talk to your D&R representative first.

4.7 LCRS/In-line Module connectors

Input and Output connectors.

In addition to the optional patchbay, every channel also has the following connectors at the back of the housing. The in-line module backplates are double width to accomadate two channels.

The balanced Group (GRP.) output is a stereo 1/4" jack socket:
Tip = hot
Ring = cold
Sleeve = shield

The MONitor insert is on a stereo jack socket.
Tip = return
Ring = send
Sleeve = shield

The CHANnel insert is a 1/4" stereo jack socket:
Tip = return
Ring = send
Sleeve = shield

The balanced MONitor input is a stereo 1/4" jack socket:
Tip = hot
Ring = cold
Sleeve = ground

Note: The default setting on the monitor inputs and group outputs are +4 dBu. You can choose jumper settings of -10 dBV on the channel (PCB) boards using small needle nose pliers.

The balanced LINE input is on a 1/4" stereo jack socket:
Tip = hot
Ring = cold
Sleeve = shield

A balanced XLR connector is for the MICrophone input.
Pin 1 = shield
Pin 2 = hot (in phase)
Pin 3 = cold (out of phase)

5.0 The Dual Stereo Aux Return module

This stereo return module is one of the most flexible stereo modules ever designed. It actually has two stereo returns (four inputs). Although designed for effects returns, this module can be used for stereo keyboards, drum machines, or any device needing two inputs on one fader. The paragraphs below describe stereo return A in full. Stereo return B is identical.

5.1 Input section

The input section has a stereo GAIN pot controlled by one knob. The gain control is a dual pot used to adjust the gain of two line amps (stereo input). The adjustment range is from -20dB to +20 dB. The backpanel jack sockets actively mixes the two inputs into a mono signal when only one input is used. This is done when you need to feed the output of a mono device to both channels.

5.2 Equalizer section

The two band stereo equalizer was designed for the type of equalization needed for stereo returns. The high frequency band is a shelving type at 12,000 Hz. The low frequency band is a shelving type at 60 Hz. Each band has a boost or cut of 16dB for both left / right channels.

5.3 Aux send section

The Aux send section has dual concentric pots to feed Aux busses 1&2 which is used for stereo effects returns to the stereo phone system as well as sends to other devices. Aux sends 1&2 are pre / post switchable. Aux send 3 (5) and 4 (6) send a post summed mono signal to the master aux busses. Aux 3 & 4 can be switched to Aux busses 5 & 6.

5.4 Floating Subgroup System

The stereo return can be bussed to any pair of outputs on in-line modules which allows for routing to any multitrack inputs. Also fitted on each stereo return section is a stereo balance control (*not a pan pot*), solo switch with indicator, mute switch with indicator, and 60mm stereo fader. The lower section "B" is identical to the upper section "A".

5.6 Dual Stereo Aux Return Module Inputs

Input connectors.

The Dual Stereo Return modules are not wired to the patchbay inside the console because some owners would rather have their reverbs go to dedicated inputs in order to free-up patch points for more signal processing. If you would prefer having the Dual Stereo Returns in the patchbay, we would suggest wiring them to the last rows in the far right column of the tie lines. A permanent magic marker can color the blue jacks black (all inputs). If you need assiatance, call your D&R Representitive.

The balanced inputs are on 1/4" stereo jacks.

Tip = hot
Ring = cold
Sleeve = shield

There are four input jack sockets on the back panel of each Dual Stereo Return module

6.0 Optional Patchbay - description

The patchbay is designed around Bantam type tiny telephone jack sockets. This optional patchbay is completely modular and can be expanded as your budget allows or ordered complete. All master inputs / outputs and 120 tie lines (for signal processing) are standard when you order the patchbay. The entire patchbay is balanced and internally "starground" wired.

6.1 Patchbay - points

Channel patch points from left to right are:

Line input - channel insert send & return - monitor input - monitor insert send & return - group output.

Each four rows of channel patch points are followed by four channels of multitrack inputs and outputs. The tape inputs and outputs are normalled to group outputs and monitor inputs inside the patchbay.

The **Master Section** has six rows of Bantam type jacks.

First Row: Left master insert send & return, right master insert send & return, +4 outputs left & right, -10 outputs left & right.
Second Row: Tape or mastering machines A, B, & C inputs left & right.
Third Row: Tape or mastering machines A, B, & C outputs left & right.
Fourth Row: Tape, DAT, CD, or two track machine playback inputs to CRM.
Fifth Row: Aux send outputs 1 thru 8. You can normal these jacks to the inputs of selected signal processing.
Sixth Row: Two sets of four mults (parrallels) used for patching the output of one device to the inputs of other devices.

Tie Lines: The tie lines (120 in total) are in rows of eight. The tie lines are for any signal processing equipment. For ease of use, all outputs are on blue sockets, and all inputs are on black sockets. The drawing shows the first 40 (of 120) tie lines. Interfacing with external machines, effects, or power amplifiers can be performed via the connector panels on the backplates of the console or via the 25 pin sub 'D" connectors on the patchbay connector panel.

7.0 Instructions for operation

The Orion is designed to be the perfect recording /mixing console for multitrack, post production, and MIDI studios. In order to get more familiar with the Orion, we shall discuss the entire recording process and divide it into five basic situations. Situation 1 through 4 are for the more conventional recording studios, and situation 5 is for the MIDI studio.

1. The session - Recording from microphone or line input to the multitrack machine. This could be from one or more channels at a time.

2. The playback - In this mode you would listen to what has been recorded on the multitrack machine.

3. The overdub - Overdubbing is listening to already recorded tracks and recording on empty tracks until all tracks are filled.

4. The remix - Playing of all recorded tracks together with signal processing equipment and all that is necessary to create the final mixdown.

5. The MIDI or Virtual Session - Programmed keyboards, drum machines, reverbs, effects, vocal and/or instrument tracks from a multitrack machine and who knows what else, all at the same time.....direct to your Dat Machine, two track master machine, Hard Disk editing system, CD recorder, or cassette deck.

7.1 Situation 1 - The Tracking Session

Recording basic tracks - This is the beginning of a session. All input channels are placed in the mike mode by leaving the line switch in the up position if the microphone input is to be used in this channel. Phantom powering is applied if necessary. The EQ switch should be in the up position unless you require EQ on that channel signal. The signal flows through the fader and is available postfader to be routed by way of the assignment switches which can feed the input to your multitrack recorder. The LED bargraph reads the outgoing signal.

Microphone / Line Gain

The amount of gain required may depend on the type of microphone being used, the sound pressure level, and the distance between the sound source and microphone. When the
line switch is activated, the same gain control varies the gain of the separate electronics for the balanced line input. The "phase" switch affects the mike input only.

After plugging in a mike or line signal, depress the channel solo switch above the channel fader you are setting, set the solo status switch to pfl in the master section, then turn the gain control (of that channel) clockwise until a "0" output level is reached on the master meters. Now slide up the channel fader to "0". Now switch the solo out. If the signal source gets louder or softer, it may be necessary to re-check this setting. The volume will also fluctuate if you boost or cut the equaliser section.

Monitoring

With the Orion series, you are able to monitor your multitrack by way of the separate monitor section. The monitor section of the in-line module allows you to have two usable inputs, both with EQ, both being able to send to the aux. busses, both with their own volume control, panpots, mutes and solos, and able to be routed at the same time.

Multiple Modules Assigned to One or Two Tracks

When more than one microphone or line signal has to be recorded on a single track or in stereo on two tracks, a submix facility is required. This can be done easily on the Orion by way of the the internal subgroup amplifiers located on every channel module or the four "Floating Subgroups". Simply route to one of the 8 subgroups by activating a channel routing switch on as many input modules as required. Decide on which track you wish to record these signals and activate the related number. The channel metering will show the subgroup level which can be changed overall by the monitor group fader (Grp switch must be pressed). In order to monitor these tracks on the modules, the tape switch should be in the up position for monitoring pre-tape (console out) and in the down position for monitoring post-tape (tape switch down). If you wish to route several inputs to a track higher than 8, you would use the "Floating Subgroup System" (see section 3.4).

Insert Channel / Group

For high dynamic range types of inputs, a signal processor such as a compressor / limiter can be inserted in the channel or even in the monitor insert if an entire group signal is to be processed. To do this, it is necessary to activate the GRP switch in the summing channel to use the monitor insert.

Headphone (Que)

During recording it is essential that the talent hear an independent mix of what the engineer and producer are hearing. Headphone mixes are usually derived from pre-fader auxilliaries. In the Orion aux 1 & 2 are ideal for this purpose. The best way to build a mix for the headphones is to have the monitor section of the in-line module feed aux busses 1 & 2. When there is limited time to set up a headphone mix, give the talent the CRM mix (in the Phones section of the master modules) and build up an independant headphone mix on aux 1 & 2 when time allows.

Effect Sends

All unused aux sends can be used to send signals to signal processors such as the D&R "Qverb" 16 bit digital reverb, effects processors, and digital delays.

The aux sends are usually post-fader in order that the right balance between untreated and treated signals is maintained however, it is possible to switch to pre-fader.

Effects Returns

In the modern recording or MIDI studios of today, there is a demand for many effect returns and inputs for MIDI related gear. For that reason D&R has designed the Orion with stereo effects return modules. See section 5.0 of this manual for a complete description of this module. Any unused channel or monitor input can also be used for returning effects. Every channel can accept two returns with equalization and aux send capabilities. Due to the phase uncertainties of stereo reverbs and such, it is always best to keep anything in stereo in the stereo domain. You will find that the dual stereo return module has the lowest cost per input ratio of any available modules in the Orion series.

7.2 Situation 2 - The Playback

Multitrack playback

The Orion gives you a convenient way of monitoring your multitrack recorder. Put all the tape switches in their down position. Now the tape outputs are feeding the monitor path and you can adjust the amount of signal you desire and pan it within the stereo image. Most multitrack recorders today have input monitoring on their remote which will allow for monitoring tape until you press record and then it will monitor what you are sending to the track.

Auxilliary sends can be switched to get their signal from either tape or channel and equalization can be inserted in both signal paths whenever needed. Independent control over processing is monitored by solo in either signal path.

7.3 Situation 3 - The Overdub

Multitrack synchronizing

Overdubbing is the process of building up a recording track by track while listening to previously recorded tracks.

The Orion has an in-line monitor for each track of the recorder making it easy to overdub. Connected to the monitor section of the in-line module, you push all tape switches down (located above the equalizer) and do all your sync switching from the tape machine or remote. The headphone mix is on the aux send 1 & 2 busses. Aux 1 & 2 should get their signal from the monitor section. It is best to activate aux 1 - 2 or 7 - 8 PRE fader switches anytime you're using Aux 1 & 2 or 7 & 8 for a headphone mix (depending on whether you have standard or LCRS modules.

7.4 Situation 4 - The Remix

Multitrack mixing

Remix is the process of combining all recorded tracks with (keyboards and drum machines for MIDI) signal processing and sending the mix to a two track reel to reel master machine, Hard Disk editing system, CD recorder, DAT machine, or cassette recorder. On the in-line module you must push the upper "mix" switch down. This routes the tape return to the channel input and routes the mike/line inputs to the monitor section of the module. At this point you can use either a mic or line input in the monitor section which will feed the stereo mix buss. This will give you two inputs per module in the final mix. You can activate the **MF to MON** switch and have the **HMF** and **LMF** sections of the equalizer on the monitor section while the **HF** and **LF** bands remain on the channel.

You must activate the **EQ** switch if you desire EQ on the channel or monitor. The incoming signals can be routed to the stereo mix buss via the **"MIX"** switch in the channel assign
section. The monitor section normally feeds the stereo mix buss. Sub groups can be made up (as required) in the same way as during recording. Aux sends 1 - 4 can get their signal from the monitor section or channel path with pre / post switching. Aux sends 5 thru 8 get their signal from the channel section in the post fader position.

7.5 Situation 5: MIDI or The Virtual Session

Virtual Tracks: The MIDI Set-Up

In most MIDI studios there will be an eight-track rather than a sixteen or twenty four track tape machine. In the MIDI studio, the majority of music production is programmed on a sequencer using MIDI keyboards, sound modules, drum machines, or other MIDI related equipment.

Therefore, you will only require tape tracks for vocals and those instruments not adequately reproduced on today's keyboards. If there is a multitrack recorder in the MIDI studio, one of the tracks would be used to record time code (SMPTE or MIDI code). This will allow your sequencer to keep keyboards, drum machines, and other MIDI equipment synchronized.

The Orion was designed with the multi-track and MIDI studio in mind. In today's medium to large MIDI studio, there is a need for as many as 100 inputs to be used for everything from tape tracks to keyboards and drum machines. For this reason, the Orion, when fitted with both in-line modules and stereo return modules, can net over 100 inputs in the virtual track session or mix down.

8.0 Installation - Electrical

8.1 Local Electrical Voltage

Before connecting the Orion, check the AC supply voltage setting by looking at the sticker on the back of the rack mount power supply. This sould be 110V for use in areas with an AC supply between 100V and 120V, and 220V for use in areas with an AC supply between 220V and 240V.

The main fuse is a 6.3 amp fuse with a 125 volt rating (10 amp fuse in America with a 250 volt rating). After replacing a blown fuse with the correct size and rating, turn the power supply on and check the three LED indicators. If you are still missing one or more of the power rails, turn off the power supply and call the D&R Technical Support Department.

NOTE: DO NOT REPLACE THE FUSE WITH ANY OTHER TYPE AS THIS CAN BECOME A SAFETY HAZARD AND WILL VOID YOUR WARANTY.

8.2 Electrical Wiring

To take full advantage of the excellent signal to noise ratio of the Orion, it is necessary to read this part of the manual carefully.

Hum, radio frequency interferance, buzzes and instability are often caused by improper wiring and poor grounding. All equipment using three wire ac connectors should have a ground lift adaptor on each cable before plugging into the ac outlet. In most cases, the incoming electrical ground is inadequate and a dedicated ground system should be installed for the audio equipment. Your local electric power company will provide you with all local electrical codes and safety regulations. There are some ground rules to follow. All signals in a recording studio are referenced to ground. This ground must be clean and free of noise. A central place (central to all equipment) should be selected as the "central star ground point" and all grounds should terminate at this point. This point can be a solid metal plate with at least 50 places to hookup all incoming grounds. This is commonly referred to as a "star ground system".

In some instances electrical contractors will daisy chain ground connections in the ac distribution system. This is not suitable for a studio. Ideally, run a separate ground wire from each piece of equipment to the "central star ground point". The "central star ground point" should be connected to a pair of eight foot ground rods using larger (#10) wire than your equipment ground wires. Separate and identify "clean" and "dirty" AC outlets.

Use clean outlets for audio equipment and the dirty ones for lighting, air conditioning, cola machines etc. Do not intermix these two types of outlets. AC interferance can be greatly reduced by using an isolation transformer or some type of balanced ac power device to power outlets. Ground this transformer directly to the "central star point". After all equipment is connected to the ac power, check with a ohm meter or continuity tester to be sure of no possible chance of ground loops.

All equipment should be physically located as far as possible from the main breaker panel and should be totally isolated from the equipment rack and other equipment so ground loops are avoided. Equipment can be mounted in wood rack rails to avoid ground loops.

Now you can run a #12 stranded wire with jacket from each piece of equipment to the "central star ground point". All ground wires should be the same length with a tolerance of plus or minus 10% in order to have the same ground potential everywhere. On the equipment ends of each ground wire you should solder a round hole screw terminal. Remove a chassis screw from each piece of equipment and file the paint in that area so it will make good contact when you connect the terminal. Next, connect the ground wire termanal to each piece of equipment and connect each wire at the other ends to the "central star ground point".

9.0 Installation - audio

9.1 Interface CRM Levels

The Orion in its standard configuration can interface with all available equipment. As a service of D&R, free installation consultation is available. Contact your supplier for details.

Attention concerning the CRM output must be noted. This output delivers a nominal +4 dBu level which is sometimes too high for power amps rated at 300mV sensitivity for full output. In some instances an input attenuator at the power amp's input
is required to reduce this +4 dBu level by up to 12 dB. Contact the D&R Technical Support Department for details.

NOTE: This allignment is imperative in order to avoid damage to the speakers, or in some cases, damage to the ears of the listener.

9.2 The Initial Hook-Up

First connect the rack-mounted power supply to the console. All faders, monitors, and effect returns must be in the "down" or "off" position. In order to ensure the best signal to noise ratio for your system, the next steps should be performed in the order they are printed.

a. Connect the CRM outputs (located on the master module backplate) to the inputs of your control room speaker power amps. Now turn on the console power supply and then turn the power amp on and check for any hum, buzz, or interference. Slowly turn the CRM control clockwise until it is wide open while listening for excessive noise. You should only hear a faint "hiss". If everything is O.K., continue. If any hum or excess noise is present, stop and try different ground and shielding arrangements until the system is clean. After checking the main power amp and speakers, check CRM 2.

b. Before making any other connections move each monitor fader to the 0 dB position with the tape switch depressed on each monitor section. Connect the multitrack outputs to the tape return connectors on the backplate of each in-line module (or via the 25 pole sub-D connector if the optional patchbay is installed), then connect each connector on the tape output of your multitrack. Check for hum or noise after each track has been hooked up. "Hiss" will normally increase slightly with each track. Connect the tape send output jacks to the inputs of the multitrack. Carefully listen for excessive noise or hum. If after hooking up an input or output excessive noise or hum is detected, stop and take corrective action before proceeding. Do not hook up all 16, 24, 32, or 48 tracks and then listen. You may need to rewire the entire cable harness to make the system clean.

c. Connect stereo tape recorders (inputs and outputs), stereo headphone amp, and all signal processors.

NOTE: MAKE SURE THAT YOU CHECK FOR HUM OR NOISE AS EACH INPUT OR OUTPUT IS CONNECTED.

9.3 Shields & Grounds of Equipment

The shield of any audio cable connection should be connected at one end only. If not, ground loops and high frequency cross-talk could result. Connect the shield as a general rule to the signal source (output) of anything. In high RF areas it is wise to connect the other end of the shield through a 0.01 microFarad capacitor. This will ground the RF but will not affect audio frequencies. When connecting balanced microphones, use two conductor shielded audio cable and connect both conductors and the shield at both ends.

When connecting line level cables, use two conductor shielded cable and follow the instructions in the paragraph above. Remember, the shield is not considered to be "ground" and it should only be connected at the output of any device. There are only a couple of exceptions to this rule, one is patch cords and the other is microphone cables. We realize that the correct interfacing of different equipment is difficult, but once properly installed, the system will be clean and noise free.

It is important to understand the term balanced. Balanced does not mean the input or output is professional, the single factor that normally determines whether something is professional is the level of the input or the output. +4 dBu is considered professional. -10 dBv is considered to be semi-professional. Because many semi-professional tape machines are built to professional specifications, D&R builds into the Orion console the ability to interface with both levels.

Note: When checking your new Orion console for noise, you will notice that the console is extremely quiet without any external equipment hooked up. D&R is not responcible for the noise you will experience when interfacing other equipment. Since you are use to other consoles when first encountering a D&R, the lack of noise from your Orion makes you more aware of noise from other equipment as you hook it up. D&R recomends using the highest quality external equipment with the Orion. Because high quality sound must be monitored with speakers and amps with extreme specs, D&R suggests using Pacific Innovative Amps to drive your speakers. Ask your D&R representative for more information.

10.0 Connecting the Orion

10.1 Master module # 1 (CRM & Solo)

Master insert left	Tip = return Ring = send Sleeve = ground
Two track A, B, & C	Tip = hot Ring = cold Sleeve = shield
-10 dBv left output	Tip = hot Ring = n / c Sleeve = ground
+4 dB left balanced output	Tip = hot Ring = cold Sleeve = shield
CRM 1 & 2	Tip = left Ring = right Sleeve = ground

10.2 Master module # 2 (Oscillator and Communications)

Master insert right	Tip = return Ring = send Sleeve = ground
Two track A, B, & C Right (playback)	Tip = hot Ring = cold Sleeve = shield
-10 dBv left output	Tip = hot Ring = n / c Sleeve = ground
+4 dB left balanced output	Tip = hot Ring = cold Sleeve = shield
Power supply	Pin 1 = Ground Pin 2 = +18 vdc Pin 3 = -18 vdc Pin 4 = +48 vdc Pin 5 = Ground

10.3 Master module # 3 (Aux 1, 3, 5, & 7 and Studio)

Aux 1 output (balanced)	Tip = hot Ring = cold Sleeve = shield
Aux 3 output (balanced)	Tip = hot Ring = cold Sleeve = shield
Aux 5 output (balanced)	Tip = hot Ring = cold Sleeve = shield
Aux 7 output (balanced)	Tip = hot Ring = cold Sleeve = shield
Studio Output	Tip = left Ring = right Sleeve = ground

10.4 Master module # 4 (Aux 2, 4, 6, & 8 and Phones)

Aux 2 output (balanced)	Tip = hot Ring = cold Sleeve = shield
Aux 4 output (balanced)	Tip = hot Ring = cold Sleeve = shield
Aux 6 output (balanced)	Tip = hot Ring = cold Sleeve = shield
Aux 8 output (balanced)	Tip = hot Ring = cold Sleeve = shield
Phones Output	Tip = left Ring = right Sleeve = ground

This concludes the master section module connections. Refer to section 8.0 through 9.4 of this manual for usefull ideas and wiring techniques.

10.5 Connecting the In-Line / LCRS Module

Description:	Connector:	Connection:
Group output (tape send) balanced	1/4" TRS	Tip = hot Ring = cold Sleeve = shield
Monitor INSert send & return	1/4" TRS	Tip = return Ring = send Sleeve = ground
Channel INSert	Same as above	
MONitor input (tape return) balanced	1/4" TRS	Tip = hot Ring = cold Sleeve = shield
LINE input balanced	1/4" TRS	Tip = hot Ring = cold Sleeve = shield
Mic input (balanced)	XLR	Pin 1 = shield Pin 2 = hot + Pin 3 = comm -

11.0 Troubleshooting and servicing

11.1 Troubleshooting

It is essential to study the signal flow chart carefully, Knowing and understanding the signal flow of your console will help to isolate problems. By tracing the signal from input to output jacks, you can locate and correct the problem. If for any reason you are unable to isolate a problem, contact the D&R Technical Support Department for advice. If the problem cannot be corrected over the phone, D&R will despatch a replacement module (ground freight prepaid) the same day. Most problems can be found using logical thinking and simply replacing socketed integrated circuits.

11.2 Removing a Module

The Orion is a complex piece of equipment and some understanding of its internal layout is necessary before removing a module.

An input module has wiring to the LEDbar, master section and backplates. All of these wires must be removed before withdrawing a module from the console. Each module has computer grade connectors for ease of the disconnect.

Turn off the power supply. If servicing the LEDbar meter, remove the backplates behind the LEDbar section which hold the input / output connectors. It is often easier to also remove the backplates positioned left and right of the module under test. Unplug the ribbon cable from the ledbar and remove the upper and lower screws from the meter front panel and you are ready to remove the meter. If servicing the module, remove the
metal strip underneath the LEDbar front which holds the plexiglas in place and conceals the screws retaining the module. It is now possible to remove the two module retaining
screws and carefully lift the module until all flat cable connectors on the bottom of the module PCB can be unplugged. At this point extender cables (if ordered) can be connected.

The master sections can be removed from the frame in the same way.

Because of the many flat cables on the bottom of the master section, it is wise to remove all retaining screws from all master sections, and remove the blank module on the right side of the master section. This will allow all the master modules to be moved slightly without unplugging all the flat cables. A qualified service technician will be able to service the modules in this way.

Note: Turn the power supply off each time you pull or replace a module!

11.3 Patchbay - servicing

The patchbay is fully modular and can be serviced after first removing the mounting screws, then lift up on the (armrest) end of the patchbay. A one foot stick can be used to prop up the patchbay while servicing it. Remove the cables attached to the card that needs servicing. The card can be removed after unscrewing two screws and then push the patchpanel card downwards. The card will still be connected to the star ground system which will need to be unconnected before the card can be removed from the console.

SPECIFICATIONS:

Inputs:
Mic input, balanced, RF suppressed, 2 kOhm.
C.M.R.R. at 50 Hz, -70 dB.
Sensitivity: -80 dBu max for +4 dBu output.
Noise mic: -129.5 dBu, (A-weighted) 150 Ohms.
Line inputs: balanced, 10kOhms, -20dB to +20dB.
Tape inputs: +4 dBu balanced / -lOdBv unbalanced.
Mon./chan. lnserts: 10kOhm/47 0hrn unbalanced OdBu.
Stereo machines: +4 dBu balanced -10dBv unbalanced

Outputs:
Main outputs, + 4dBu balanced / -10 OdBv unbalanced.
Tape outputs: + 4dBu / -10dBv balanced.
All other outputs + 4dBu balanced.
Noise master fader down: -lOO dBr (A-weighted).
Noise 32 channels routed: -87 dBr (A-weighted).
Noise 64 channels routed: -84dBr (A-weighted).

Equalization:
High pass filter, -3dB at 100Hz.
H.F. +/- 16dB from 4kHz to 20kHz (22kHz) shelving.
L.F. +/- 16dB from 20Hz (10Hz) to 500Hz shelving.
H.M.F. +/- 16dB from 600Hz to 15kHz bell, Q factor 1.5
L.M.F. +/- 16dB from 40 Hz to 900Hz bell, Q factor 1.5
H.M.F. and L.M.F. switchable between channel and monitor with bell curves
High pass in channel path only

Overall:
Nominal internal operating level OdBu (0.775 V).
Frequency response, any input to any output anywhere in the console.
20Hz-20kHz,-0.5dB.10Hz • 100kHz, -3dB.
Total harmonic distortion:
Mic. in Grp. out: 1 kHz: 0.015%, 10kHz: 0.025%.
Maximum output: +26dBu into 600 Ohm balanced.
Maximum headroom: not less than +22dB

Crosstalk:
Mic to line: < 105 dB at 1 kHz.
Channei mute: < 110 dB at 1kHz.
Pan-pot isolation: < 75dB at 1kHz.
Channel routing: < 9OdB at 1kHz.
Channel fader: < 95dB at 1 kHz.
Aux send kill: -9OdB at 1 kHz

Standard Configuations:
Frarne 38 (32 in-lines and 12 stereo returns).
Frame 51 (32 in-lines and 12 stereo returns with patchbay).

Note: Patchbay 32 width equivalent to 13 module positions.

Weight: 30 frame: 60kg / (132 Lbs).
38 frame: 90kg / (198 Lbs).
51 frame: with patchbay 100kg (220 Ibs).

Dimensions:

Height: 966mm / 38.03"
Depth: 929.68mm / 36.60"
Width:
Orion 30 chassis: 1282 mm / 50.47"
Orion 38 chassis: 1561 mm / 61.46"
Orion 51 chassis: 1995 mm / 78.54"

Options:
Conductive plaslic faders
Analog VU Meters (master)
Pedastal base
MidiFade Automation
PowerMute Automation
PowerVCA Automation
PowerFade Moving Fader Automation
After-market automation: V/Desk - Uptown - Tetra

D&R reserves the right to change specifications without prior notice. As with all D&R products, the Orion exceeds most of the printed specifications.

Factory / Head office:

D&R Electronica b.v.
Rijnkade 15B
1382 GS WEESP
The Netherlands

Phone: (--) 31 2940-18014
Fax: (--) 31 2940-16987
Email: info@d-r.nl
Web: d-r.nl

DECLARATION OF CONFORMITY

Manufacturers Name: D&R Electronica Weesp b.v.

Manufacturers Address: Rijnkade 15B,
1382 GS Weesp,
The Netherlands

declares that the product

ORION / ORION-X

conforms to the following product specifications:

EMC: **EN 55022: 1987**
CISPR 22 (1993) class B

EN 500082-1 (1992)

Supplementary Information:

The products herewith complies with the requirements of the EMC Directive 89/336/EEC (1989) as amended by the CE Marking Directive 93/68/EEC (1993).

D&R Electronica Weesp b.v.
Rijnkade 15 B
1382 GS WEESP
The Netherlands
President of Engineering

PATCHBAY
MULTIPIN WIRING

"ORION"

Orion - 25D to Stereo Machine Inputs

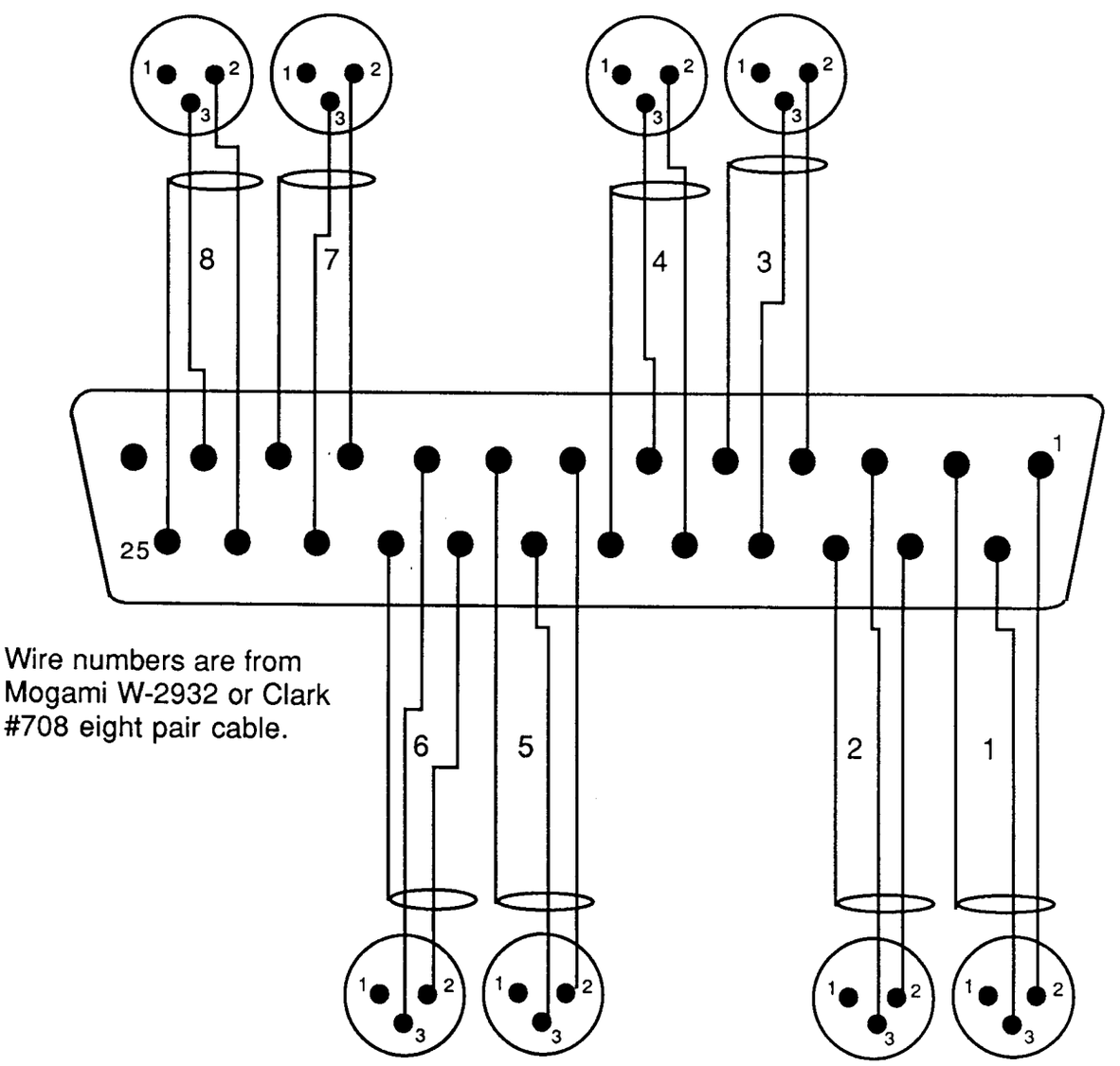

Wire numbers are from Mogami W-2932 or Clark #708 eight pair cable.

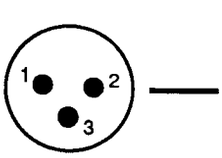

Male XLR Connector

Shields Lifted in Male XLR connectors and connected at 25D connector.

Orion - Main Outputs

(MASTER SECTION)

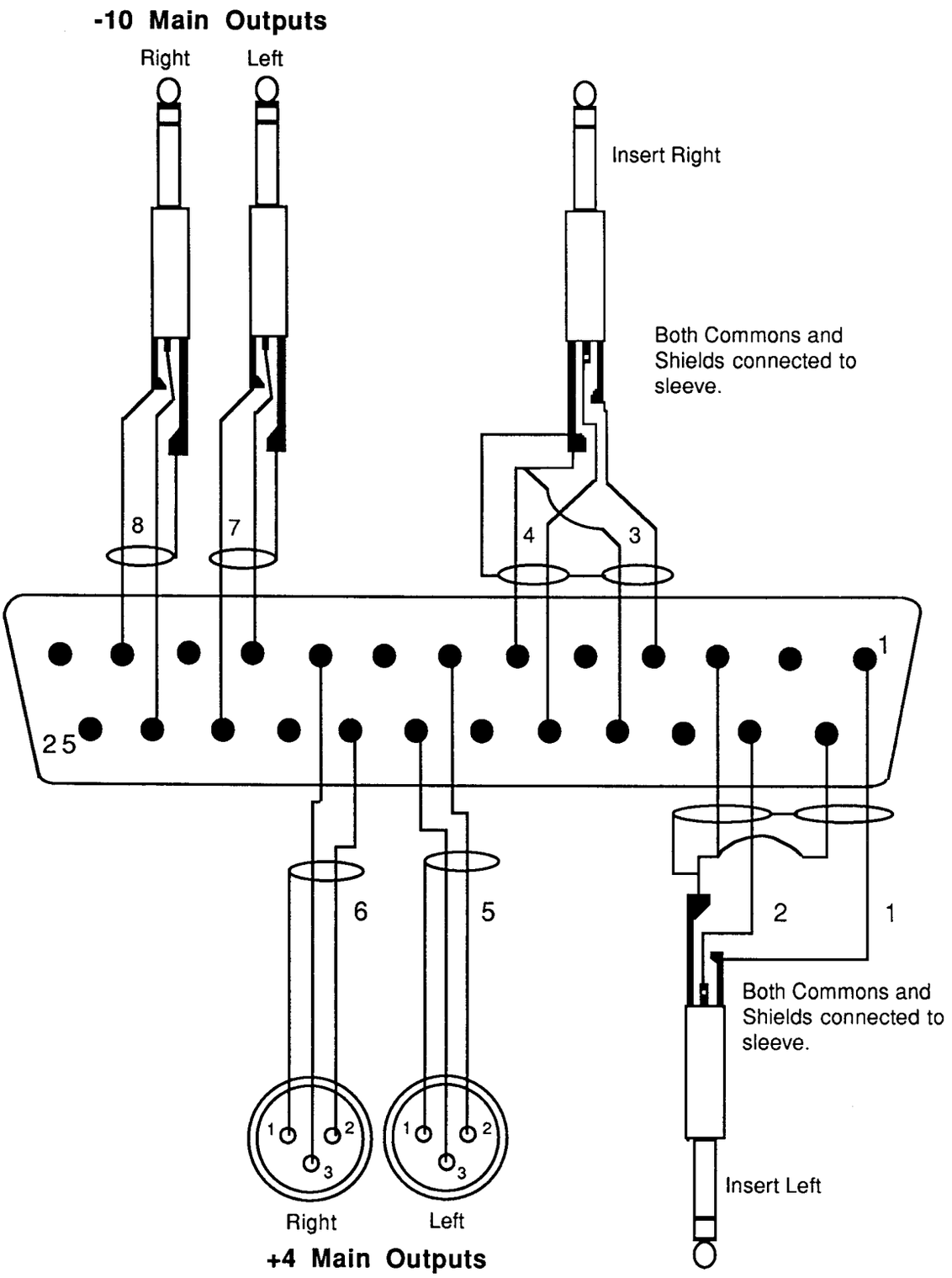

Note: This harness is connected from the Master main outputs to the main outputs on the patchbay back panel.

Orion - 25D from Stereo Machine Outputs

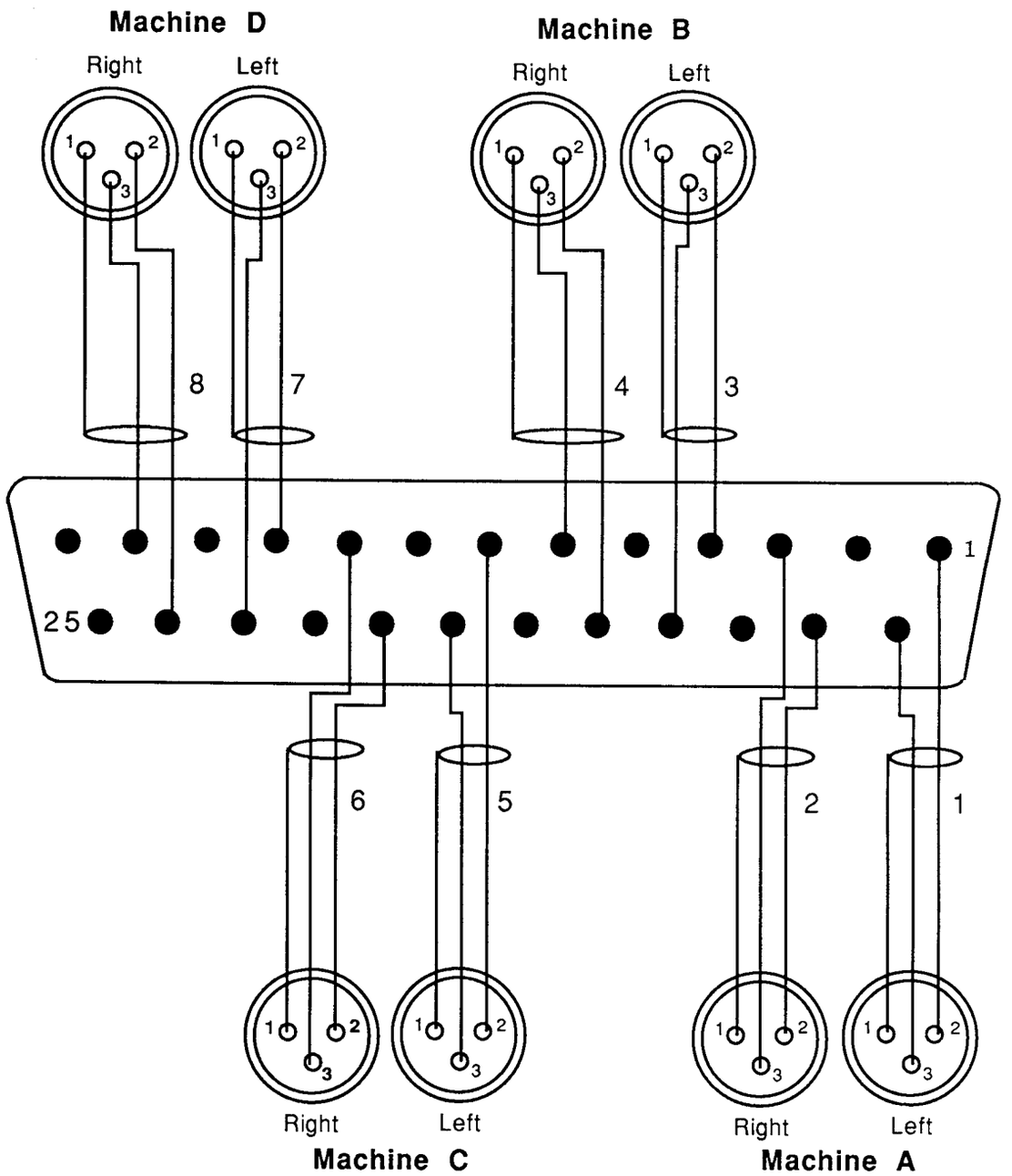

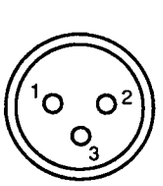

Female XLR Connector

Connect all shields in female XLR connectors and all shields are lifted at 25D connectors.

Orion - 25D to CRM Inputs

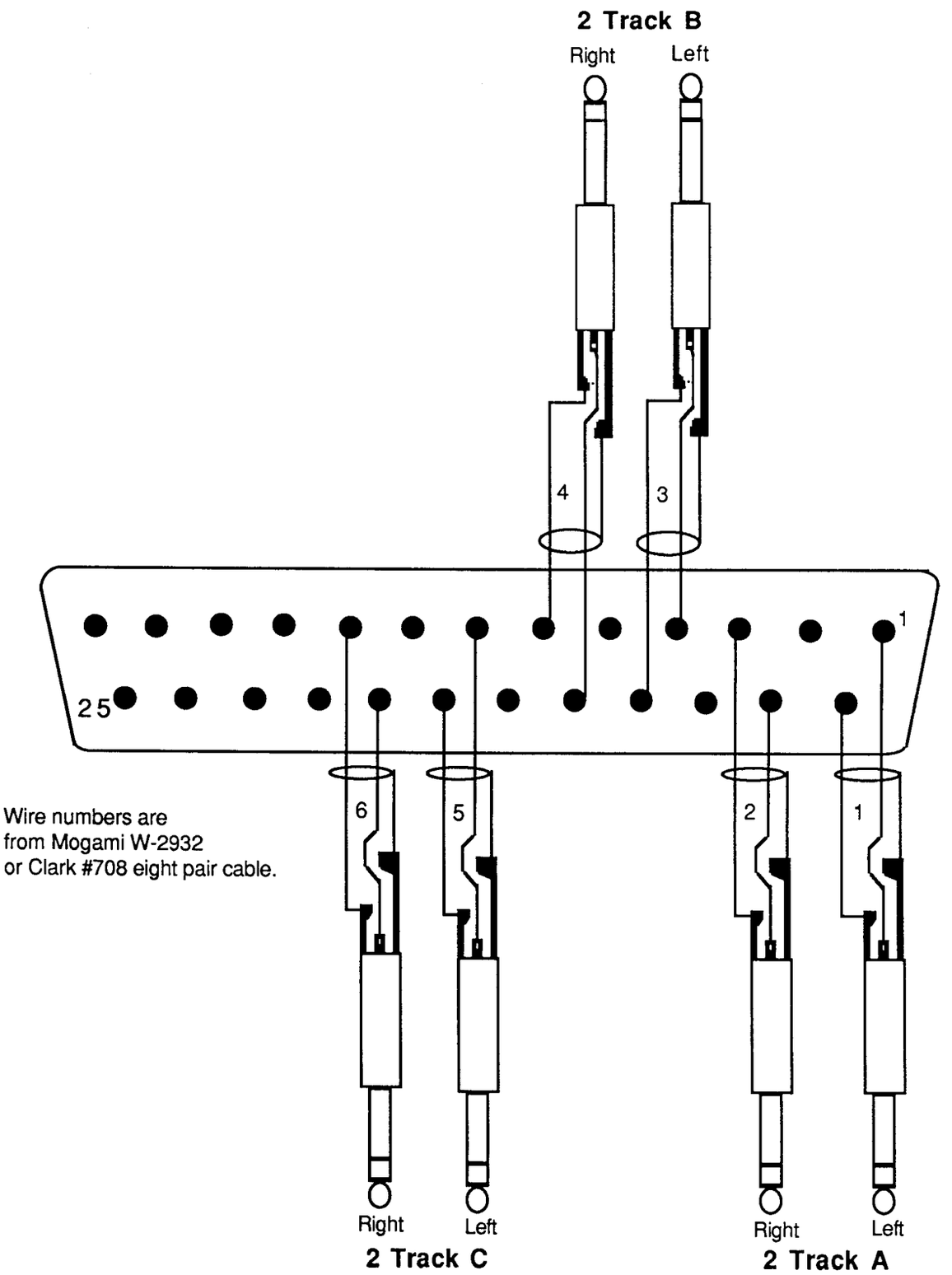

Wire numbers are
from Mogami W-2932
or Clark #708 eight pair cable.

Shields Connected in 1/4" RTS and Lifted at 25 pin sub "D" connector.

Orion - Tie Lines - Effects Inputs and Outputs

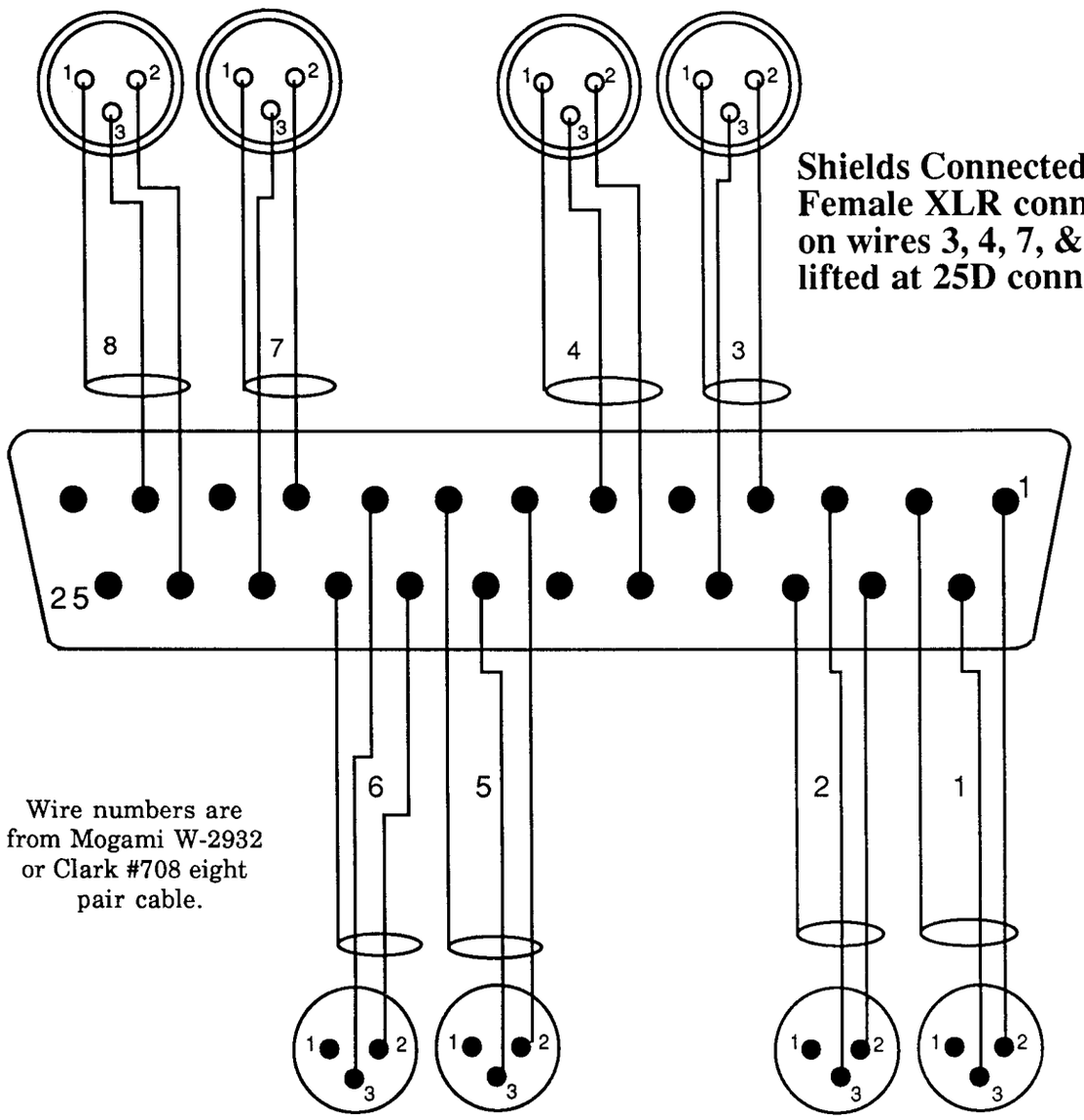

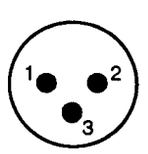

Male XLR Connector

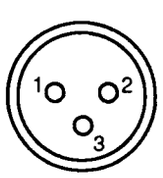

Female XLR Connector

Shields Lifted in Male XLR connectors on wires 1, 2, 5 & 6 and connected at 25D connector.

Note: One cable harness as above is needed for each pair of stereo signal processing devices.

Orion - 25D to Multitrack Inputs and Outputs

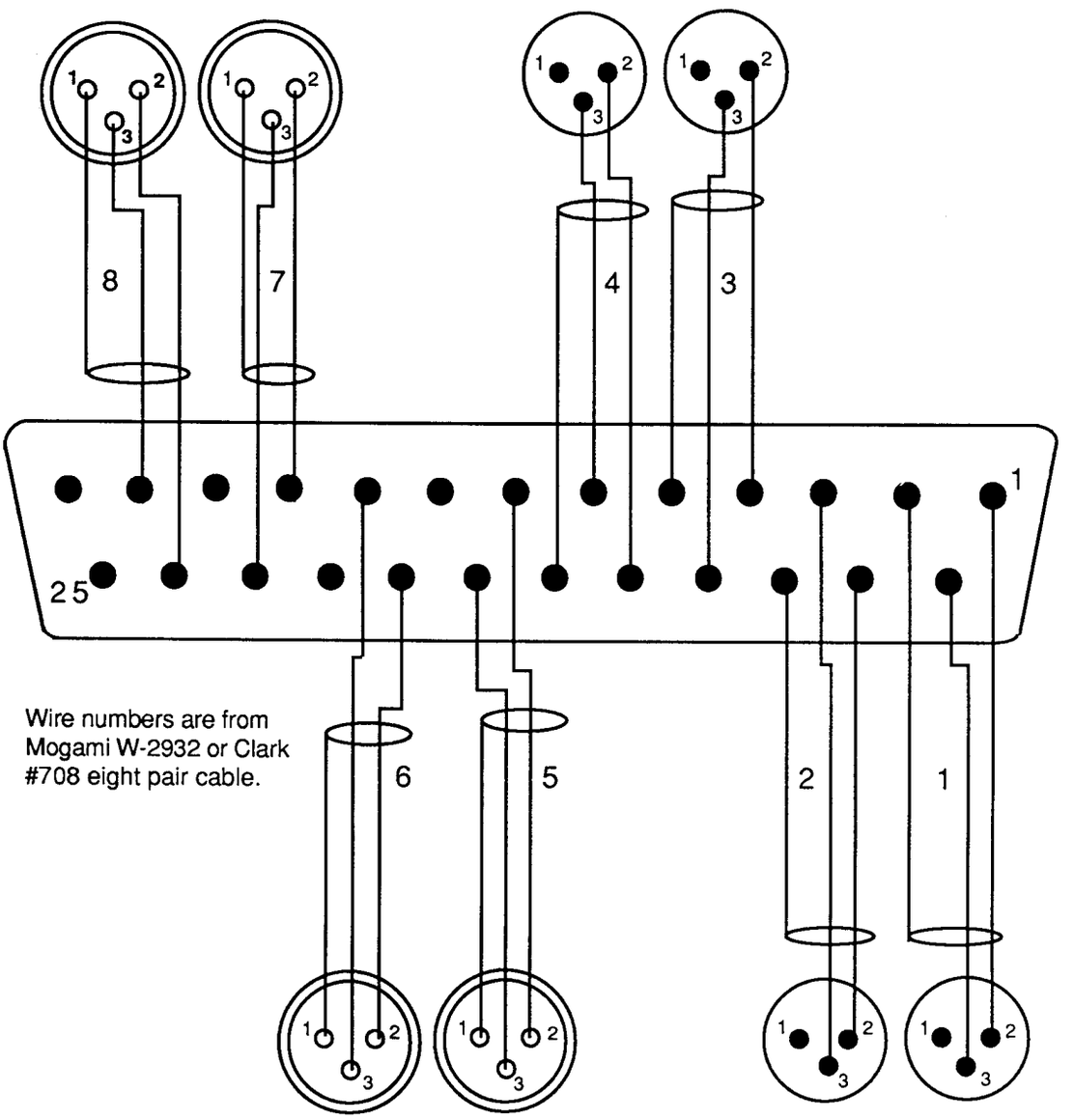

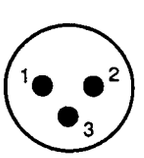

— Male XLR Connector

Shields Connected at 25D
Shields Lifted at Male XLR.

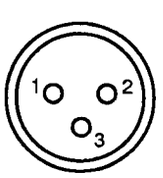

— Female XLR Connector

Shields Lifted at 25D
Shields Connected at Female XLR.

Note: One cable harness as above is needed for each 4 Tracks.

Orion - Aux Outputs 1 - 8

(MASTER SECTION)

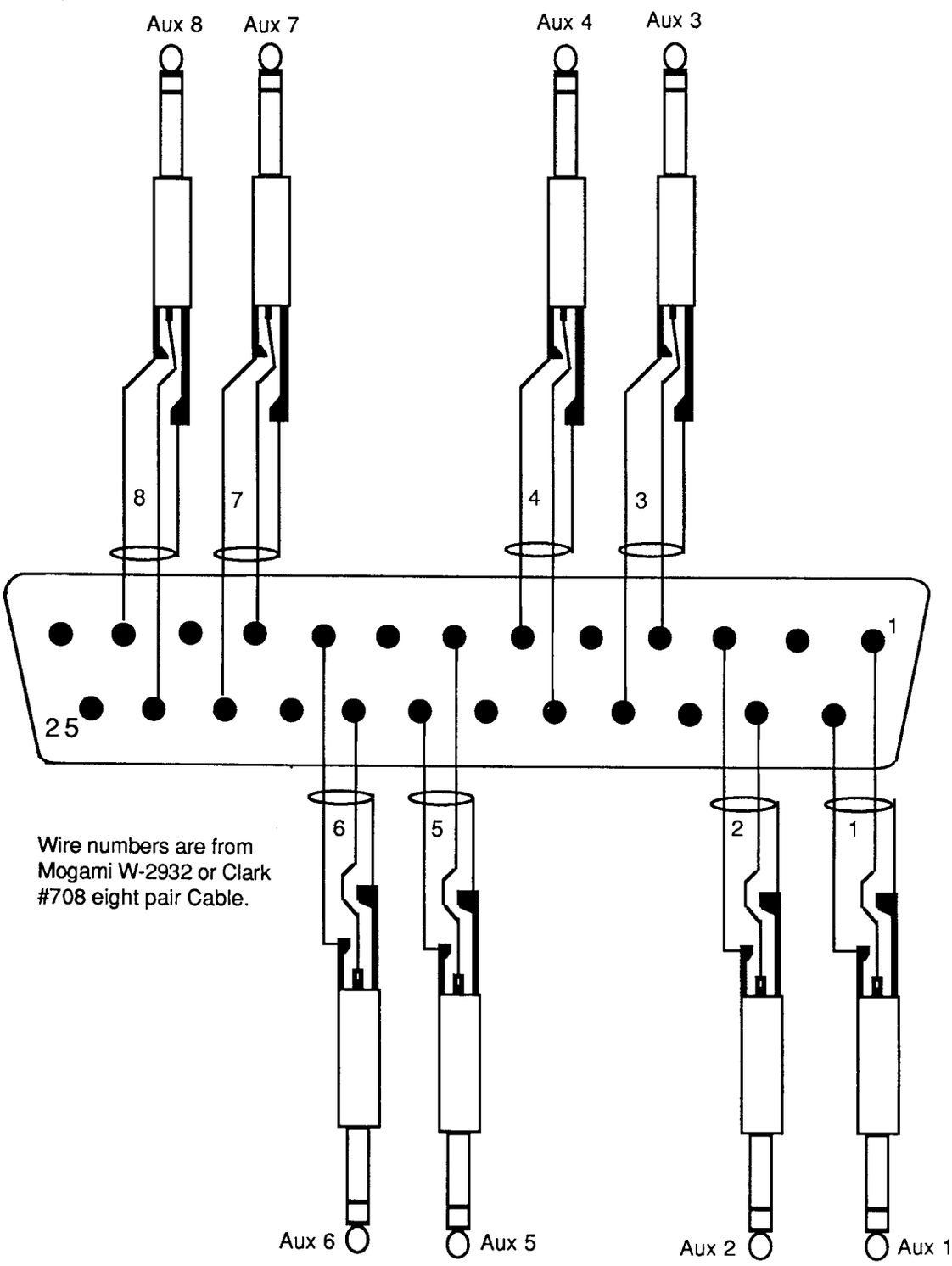

All shields are connected at 1/4" RTS sleeve only.
Note: This harness is connected between the Master aux outputs and aux outputs on patchbay back panel.

Orion - Stereo Return Inputs

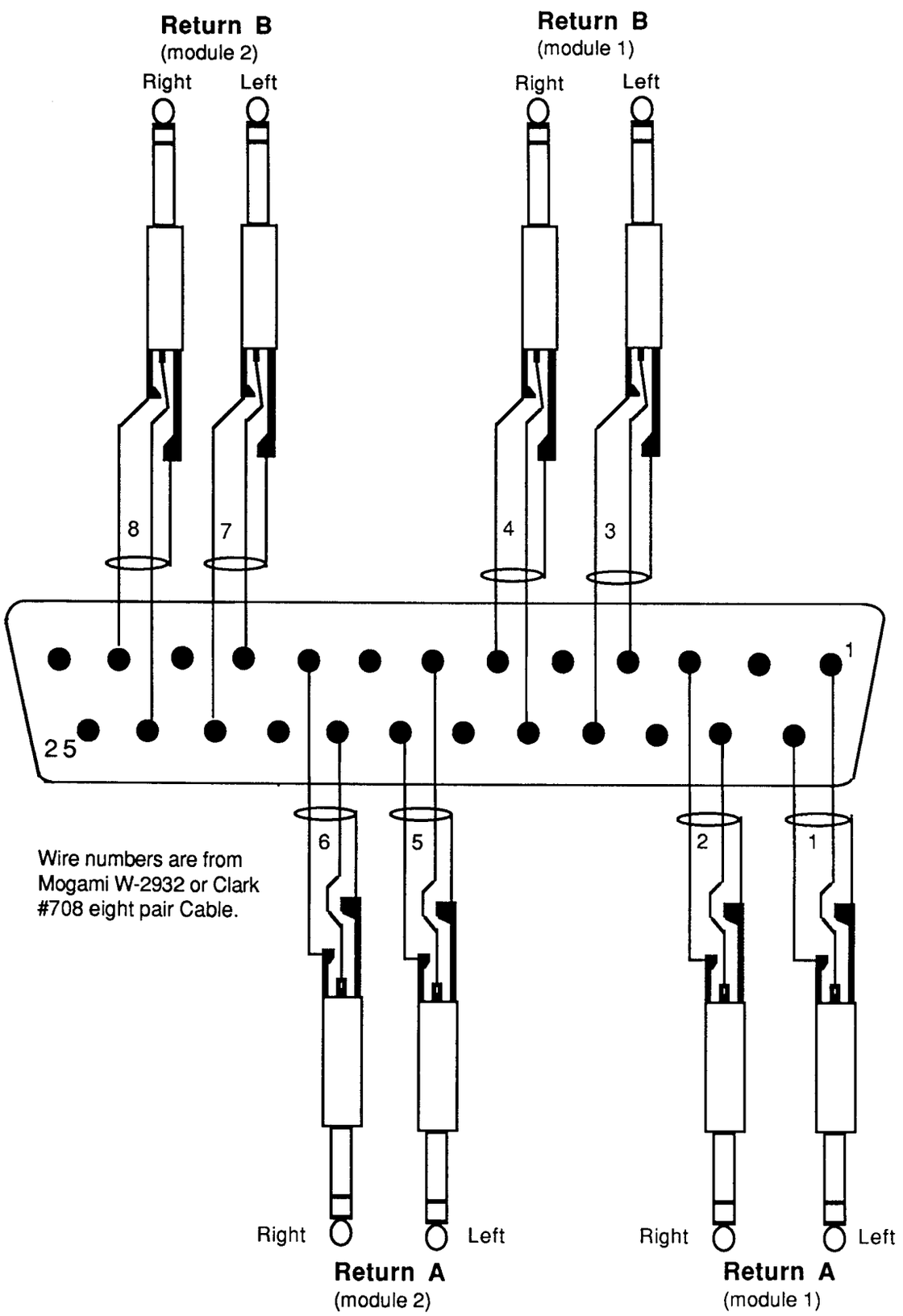

All shields are connected at 1/4" RTS sleeve only.
Note: This harness is connected between 2 stereo return modules inputs and <u>dedicated</u> tie lines on patchbay back panel.

Orion - 25D to Channel Connectors

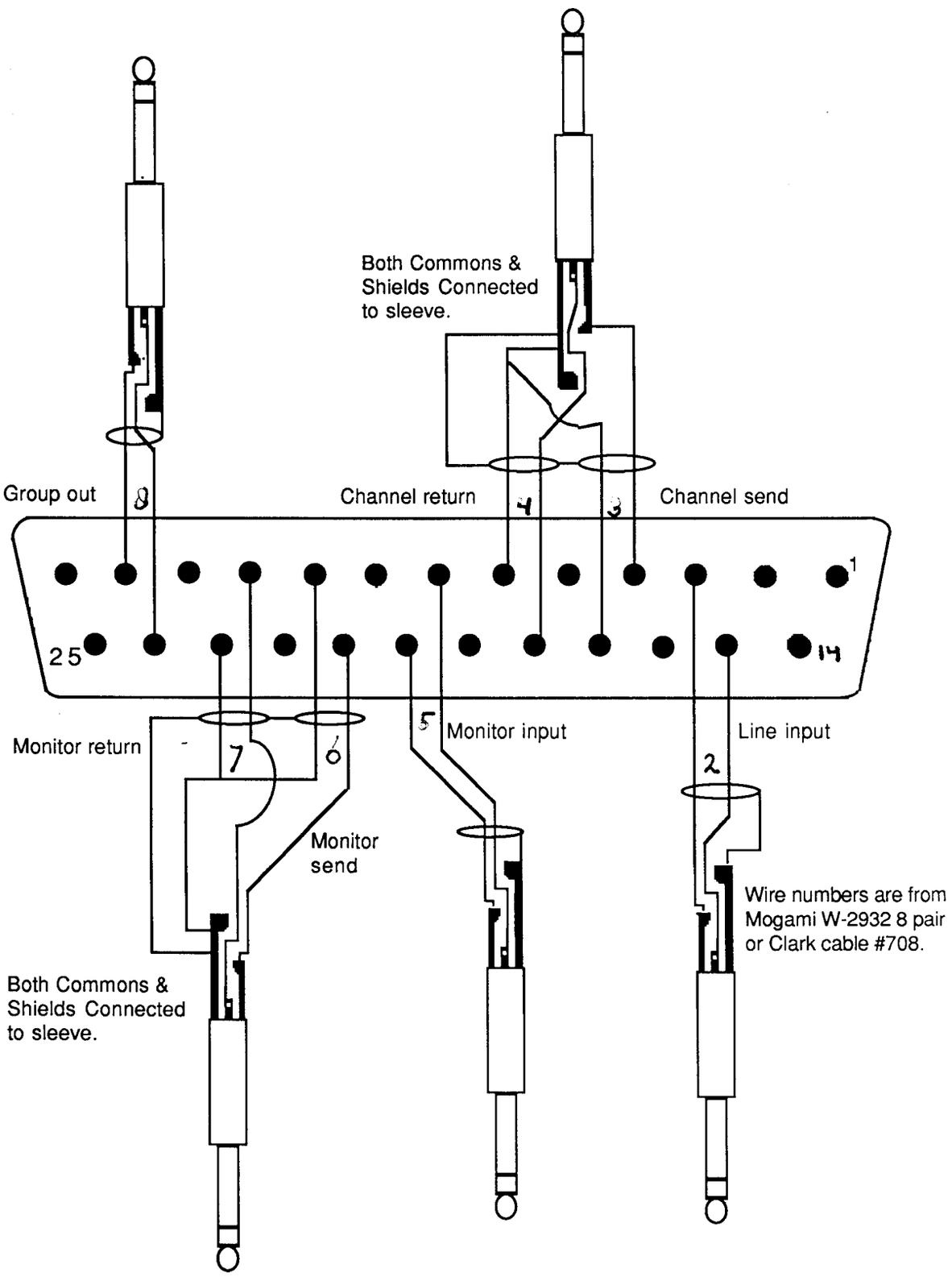

Shields lifted at 25D and all shields connected at 1/4" RTS.

CHANNEL PATCH

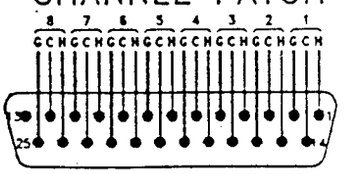

= line A
= line B
= channel send
= channel return
= monitor
= monitor send
= monitor return
= group

MULTITRACK

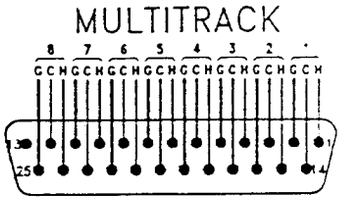

1 = INPUT 1/5/9/...
2 = INPUT 2/6/10/...
3 = INPUT 3/7/11/...
4 = INPUT 4/8/12/...
5 = OUTPUT 1/5/9/...
6 = OUTPUT 2/6/10/...
7 = OUTPUT 3/7/11/...
8 = OUTPUT 4/8/12/...

MAIN OUTPUTS

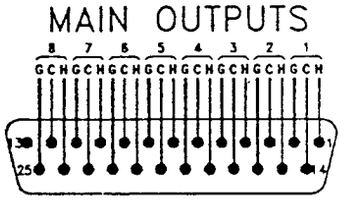

1 = MASTER SEND
2 = master return
3 = master send
4 = master return
5 = left +4 dB
6 = right +4 dB
7 = left −10 dB
8 = right −10 dB

TIE LINES

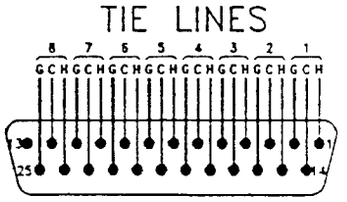

1 = tie lines 1/9/17 ..
2 = tie lines 2/10/18 ..
3 = tie lines 3/11/19 ..
4 = tie lines 4/12/20 ..
5 = tie lines 5/13/21 ..
6 = tie lines 6/14/22 ..
7 = tie lines 7/15/23 ..
8 = tie lines 8/16/24 ..

MACHINE INPUTS

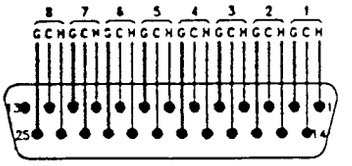

1 = 2 track A left
2 = 2 track A right
3 = 2 track B left
4 = 2 track B right
5 = 2 track C left
6 = 2 track C right
7 = 2 track D left
8 = 2 track D right

MACHINE OUTPUTS

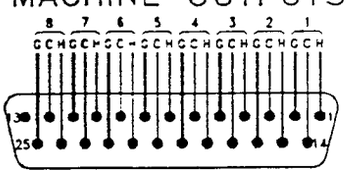

1 = 2 track A left
2 = 2 track A right
3 = 2 track B left
4 = 2 track B right
5 = 2 track C left
6 = 2 track C right
7 = 2 track D left
8 = 2 track D right

CRM INPUTS

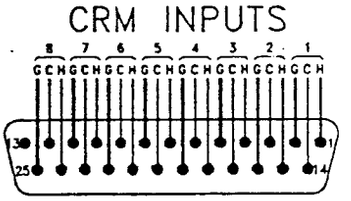

1 = 2 track A left
2 = 2 track A right
3 = 2 track B left
4 = 2 track B right
5 = 2 track C left
6 = 2 track C right
7 = 2 track D left
8 = 2 track D right

AUX OUTPUTS

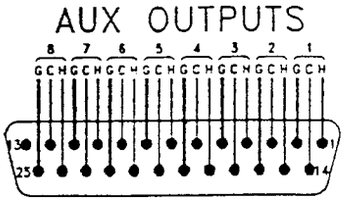

1 = 1
2 = 2
3 = 3
4 = 4
5 = 1
6 = 2
7 = 3
8 = 4

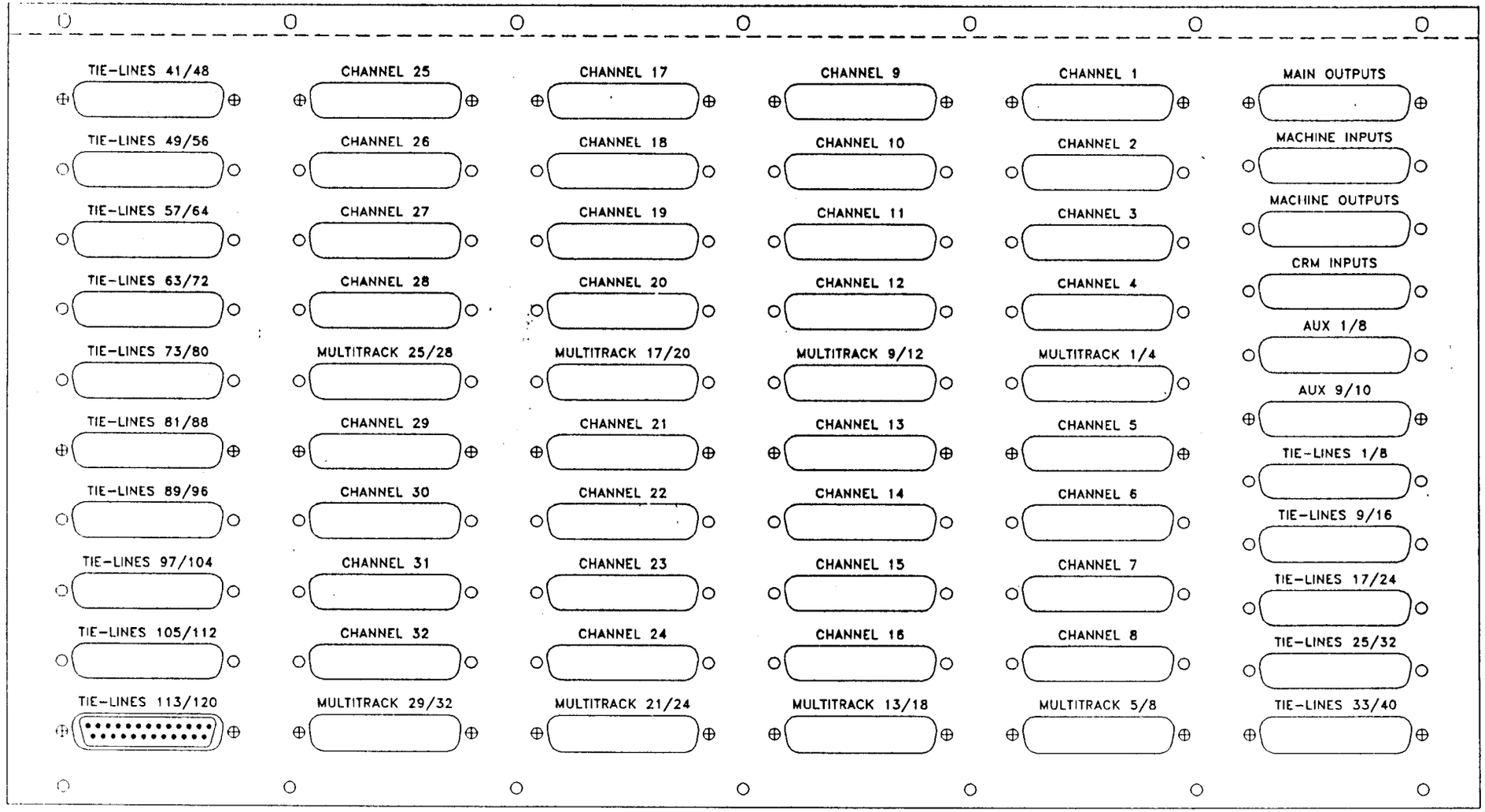

ORION PATCHBAY BACK

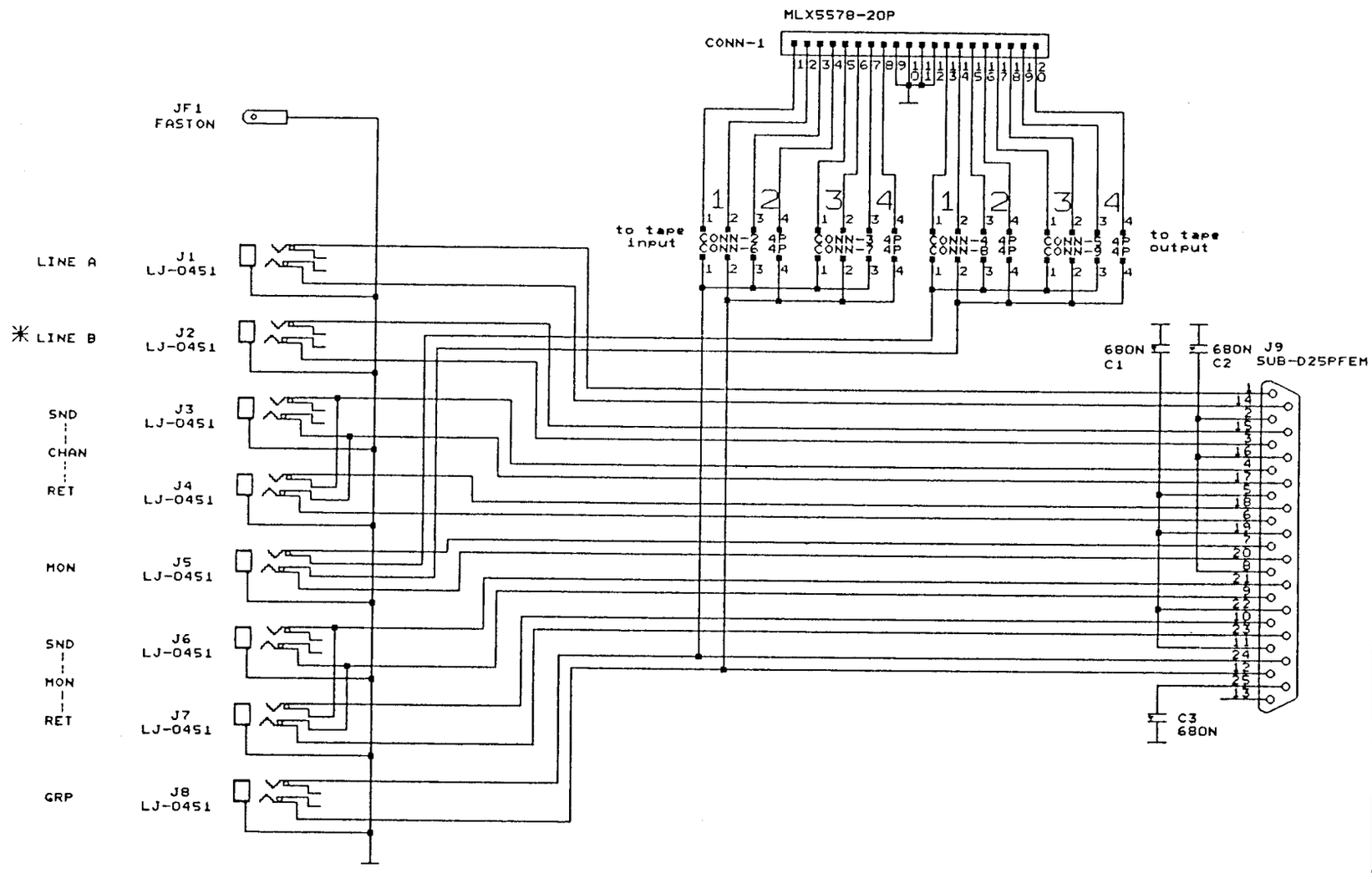

* = only for MARILON

D&R Electronica b.v.		
Title: INPUT PATCHROW ORION,TRITON,MARILON		
Size: A	Document Number: marpat1	REV: F
Date: December 3, 1991	Sheet 1 of 1	

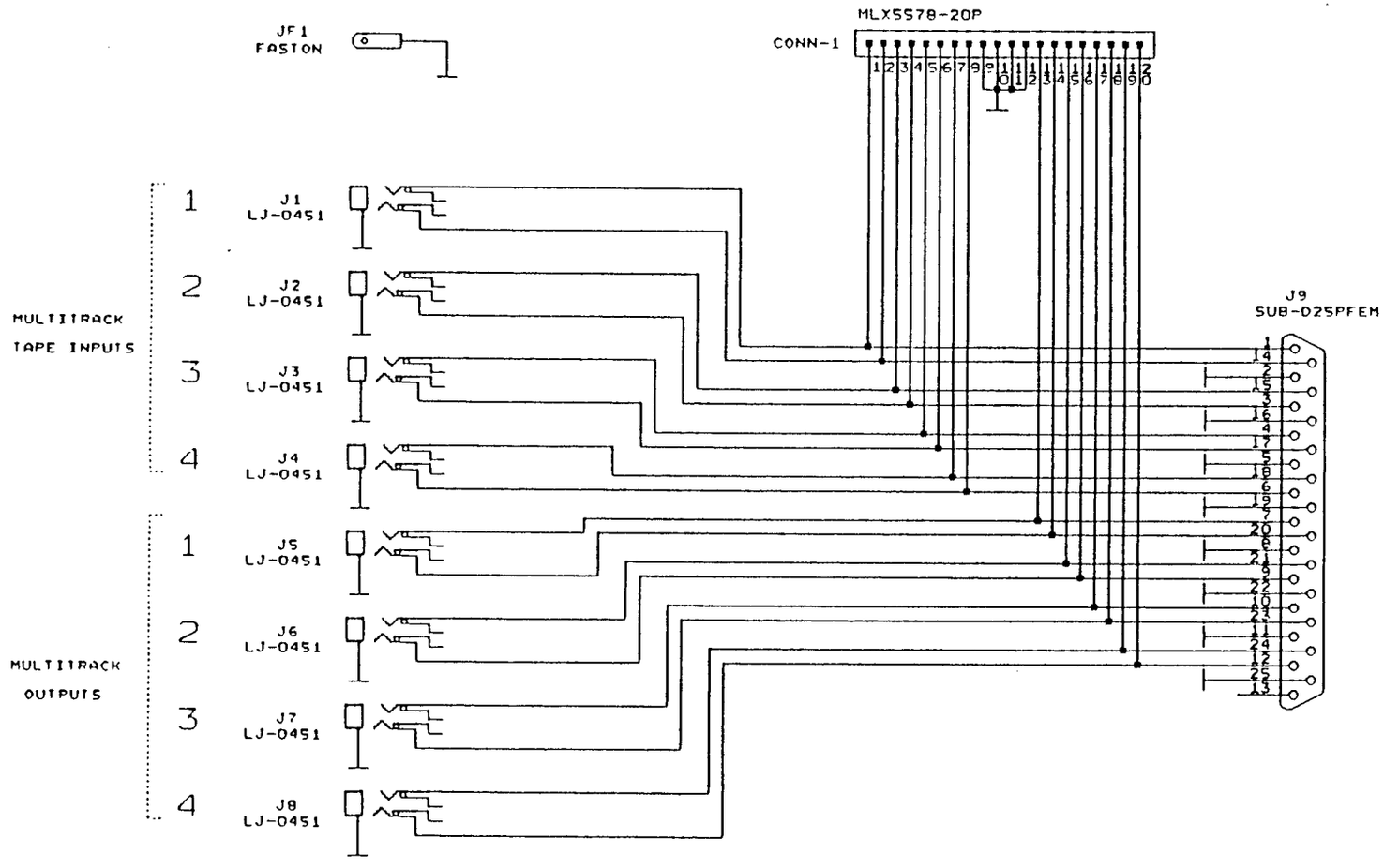

D&R Electronics b.v.		
Title: MULTITRACK PATCHROW ORION, TRITON, MARILON		
Size: A	Document Number: marpat2	REV: A
Date: December 3, 1991	Sheet 1 of 1	

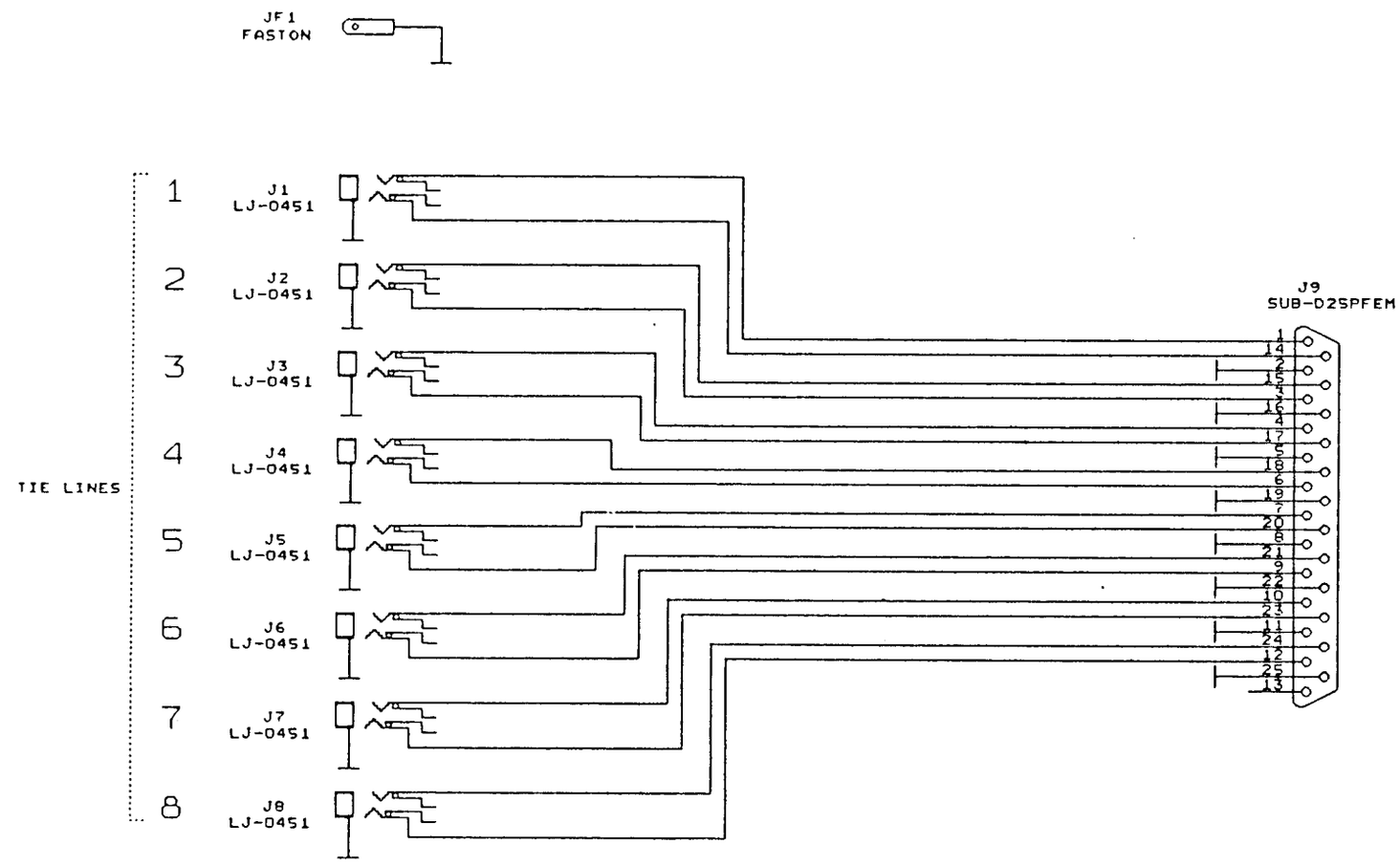

Aux sends in master section are wired the same as the tie lines

D&R Electronica b.v.		
Title: TIE LINE PATCHROW ORION,TRITON,MARILON		
Size: A	Document Number: marpat3	REV: B
Date: December 3, 1991	Sheet 1 of 1	

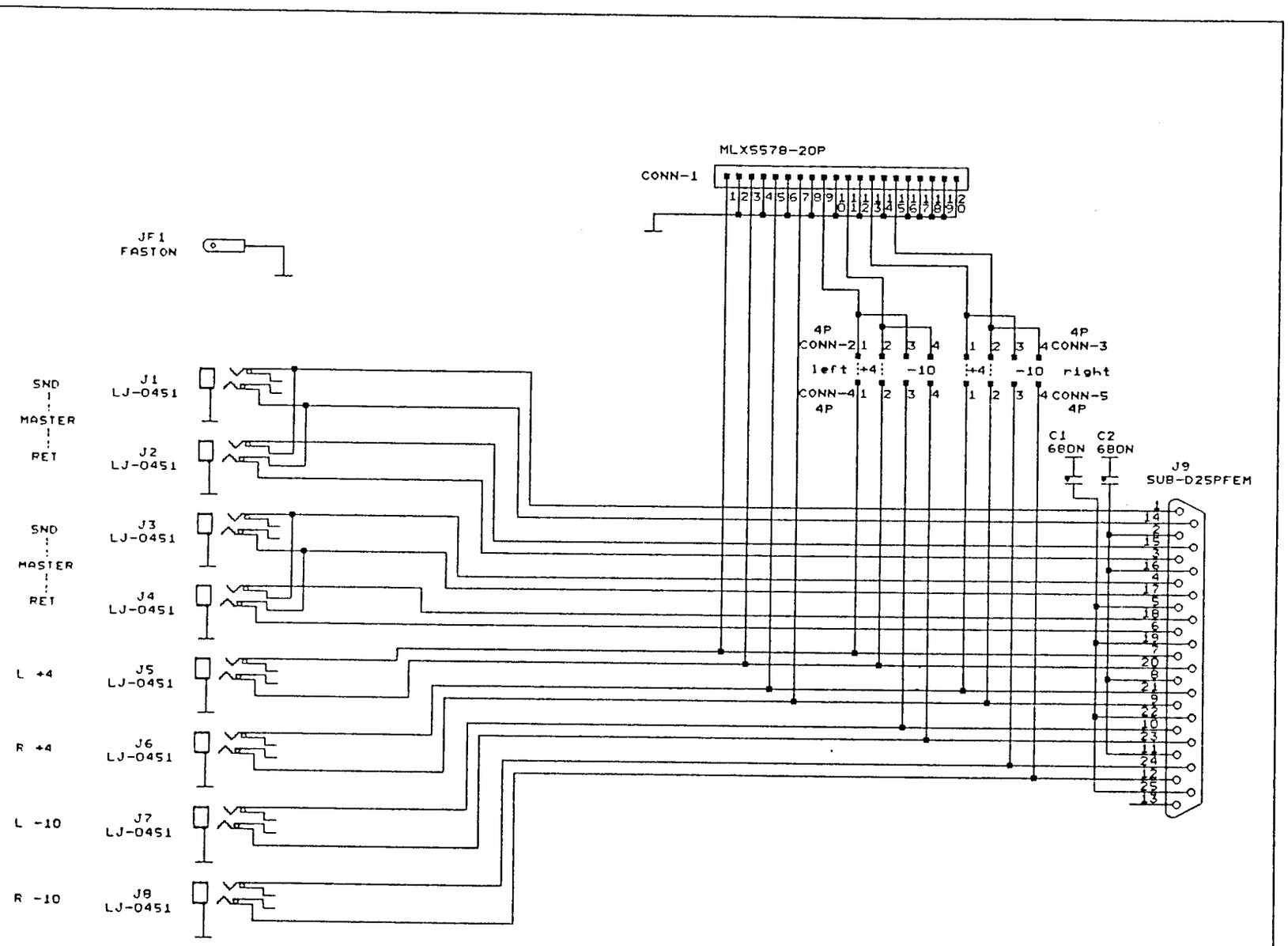

D&R Electronica b.v.		
Title: MASTER PATCHROW A ORION,TRITON,MARILON		
Size: A	Document Number: marpat4	REV: P
Date: December 3, 1991	Sheet 1 of 1	

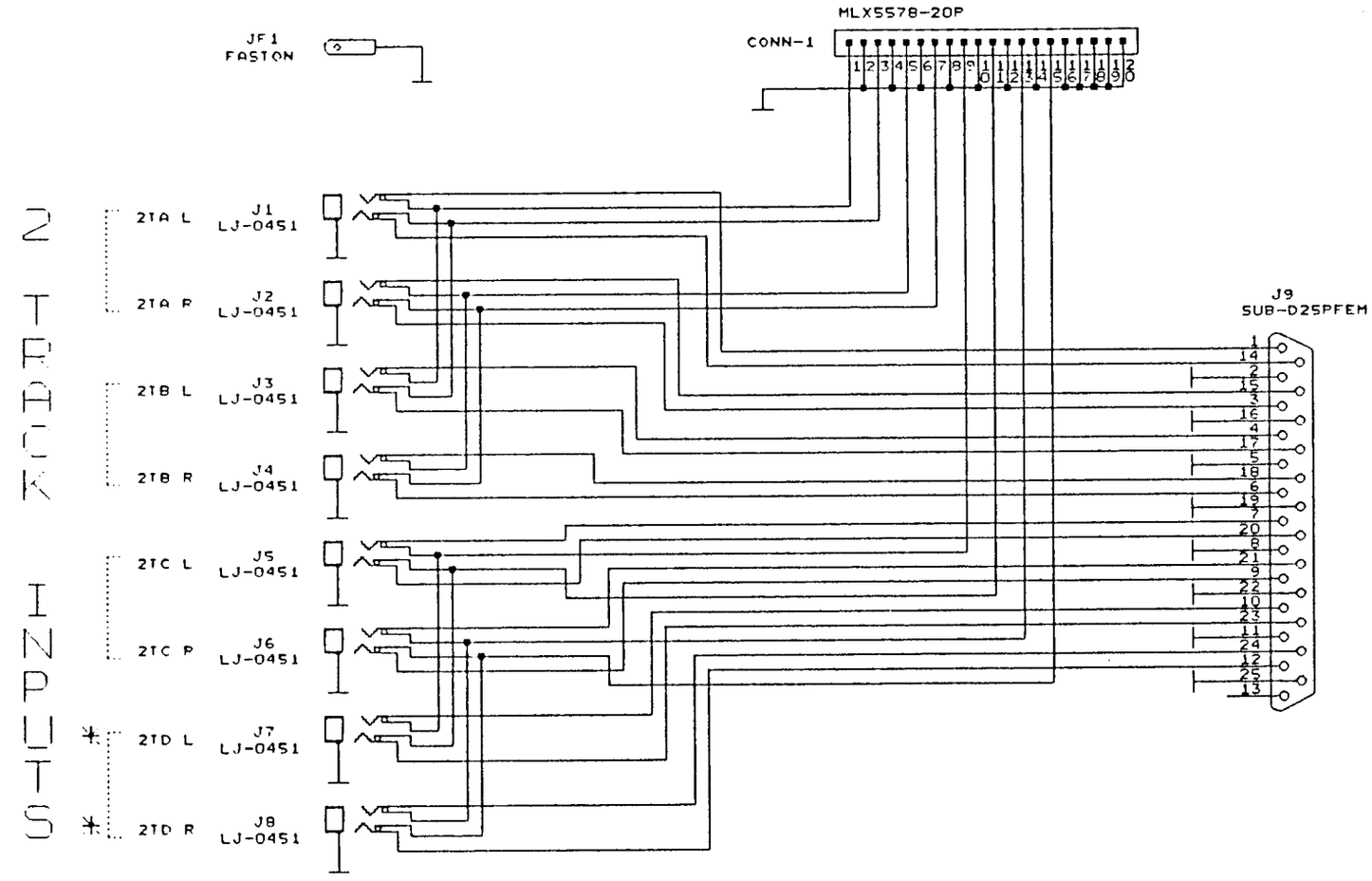

* = only for MARILON

D&R Electronica b.v.		
Title: MASTER PATCHROW B ORION,TRITON,MARILON		
Size: A	Document Number: marpat5	REV: A
Date: December 3, 1991	Sheet 1 of 1	

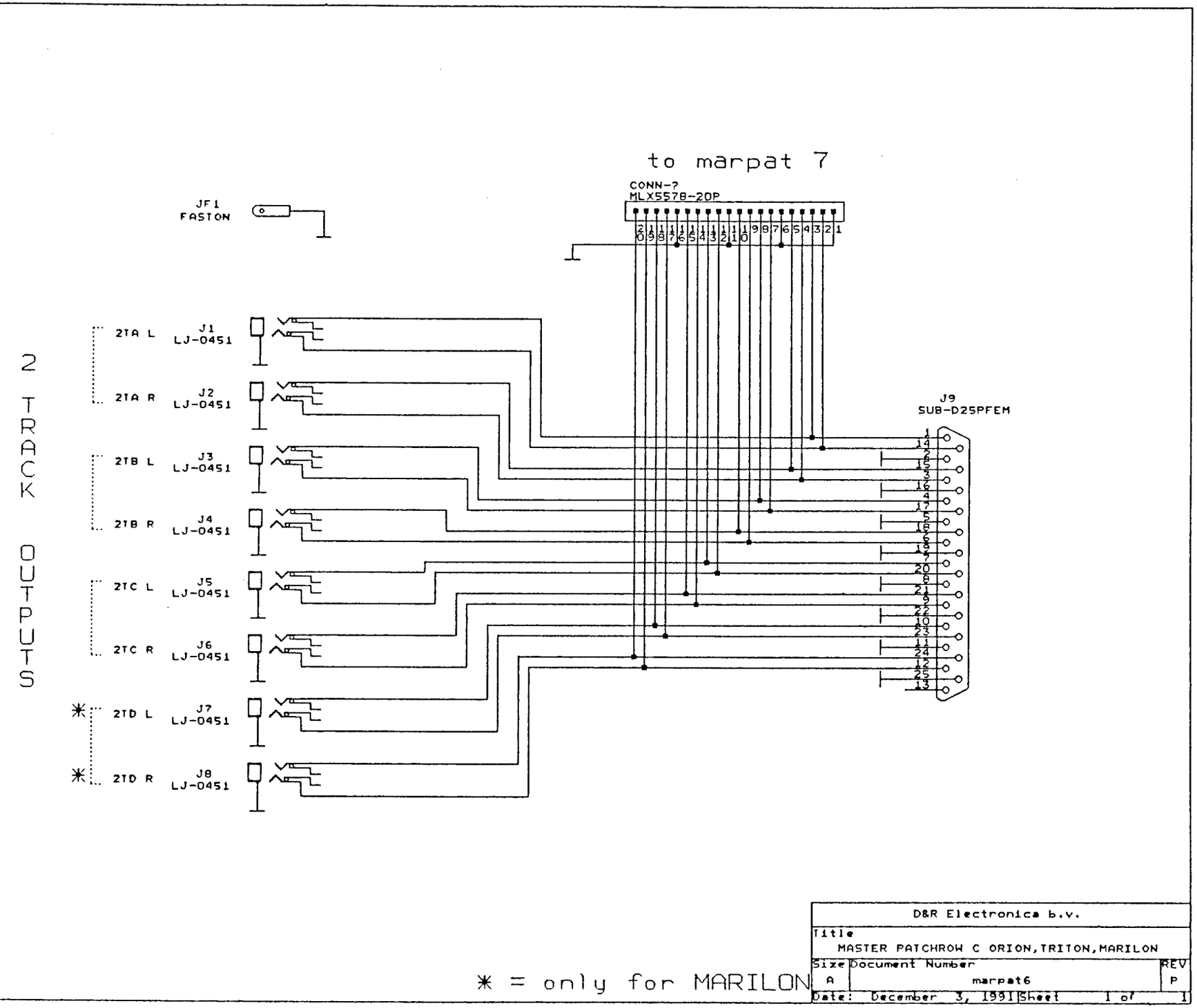
to marpat 7
CONN-?
MLX5578-20P
JF1
FASTON
2TA L
J1
LJ-0451
2TA R
J2
LJ-0451
2TB L
J3
LJ-0451
2TB R
J4
LJ-0451
2TC L
J5
LJ-0451
2TC R
J6
LJ-0451
2TD L
J7
LJ-0451
2TD R
J8
LJ-0451
J9
SUB-D25PFEM
2 TRACK OUTPUTS
* = only for MARILON
D&R Electronica b.v.
Title
MASTER PATCHROW C ORION,TRITON,MARILON
Size
A
Document Number
marpat6
REV
P
Date: December 3, 1991 Sheet 1 of 1

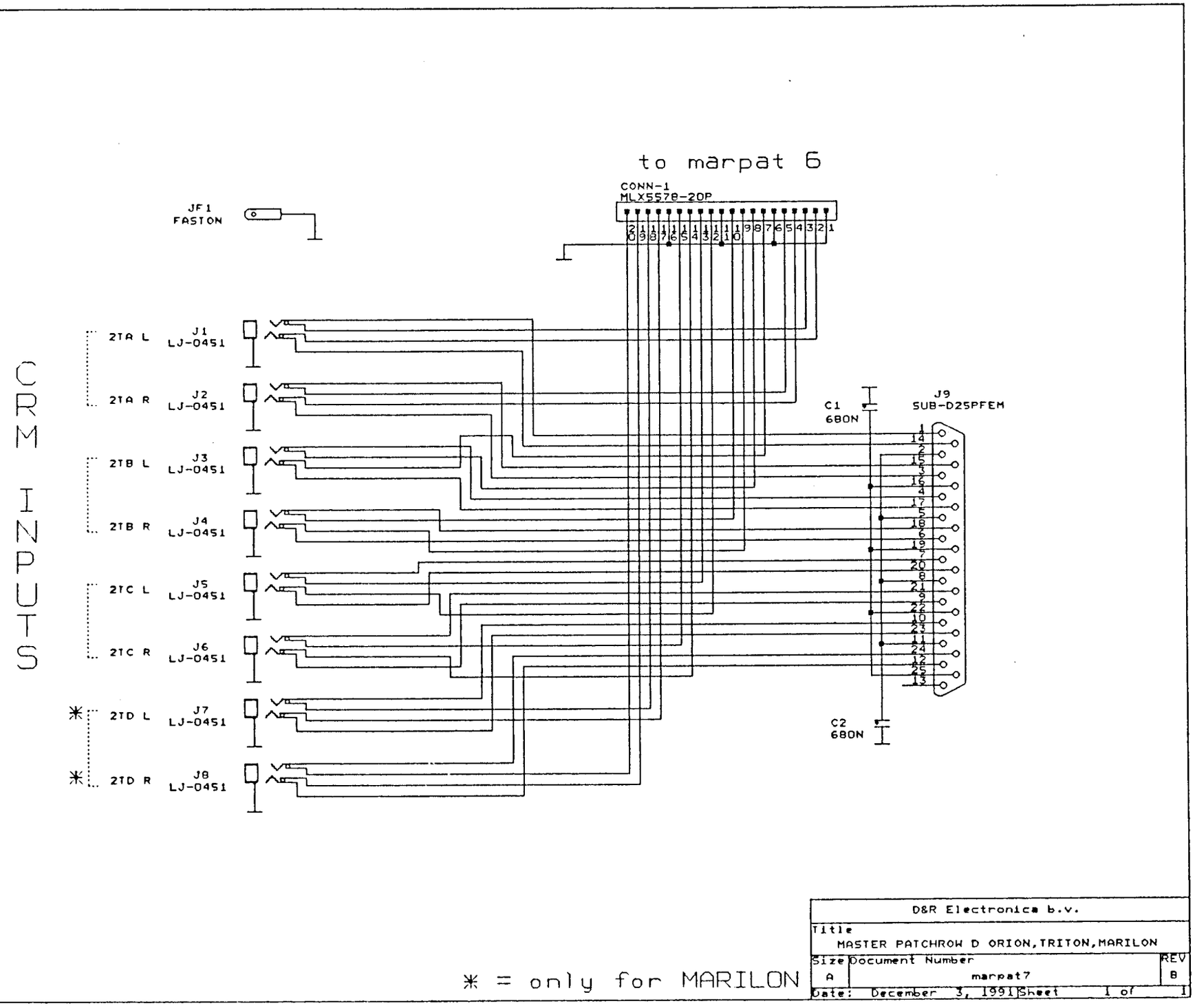
to marpat 6
CONN-1
MLX5578-20P
JF1
FASTON
CRM INPUTS
2TA L
J1
LJ-0451
2TA R
J2
LJ-0451
2TB L
J3
LJ-0451
2TB R
J4
LJ-0451
2TC L
J5
LJ-0451
2TC R
J6
LJ-0451
2TD L
J7
LJ-0451
2TD R
J8
LJ-0451
C1
680N
C2
680N
J9
SUB-D25PFEM
* = only for MARILON
D&R Electronica b.v.
Title
MASTER PATCHROW D ORION,TRITON,MARILON
Size
A
Document Number
marpat7
REV
B
Date: December 3, 1991
Sheet 1 of 1

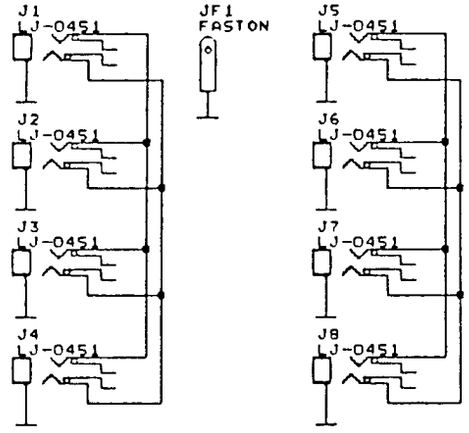

D&R Electronics b.v.		
Title: MASTER PATCHROW E ORION,TRITON,MARILON		
Size: A	Document Number: marpat8	REV: A
Date: December 3, 1991	Sheet 1 of 1	

ORION

Service Manual

D&R Electronica BV
Rijnkade 15 B
1382 GS Weesp
The Netherlands
Tel: ++31-2940-18014
Fax: ++31-2940-16987

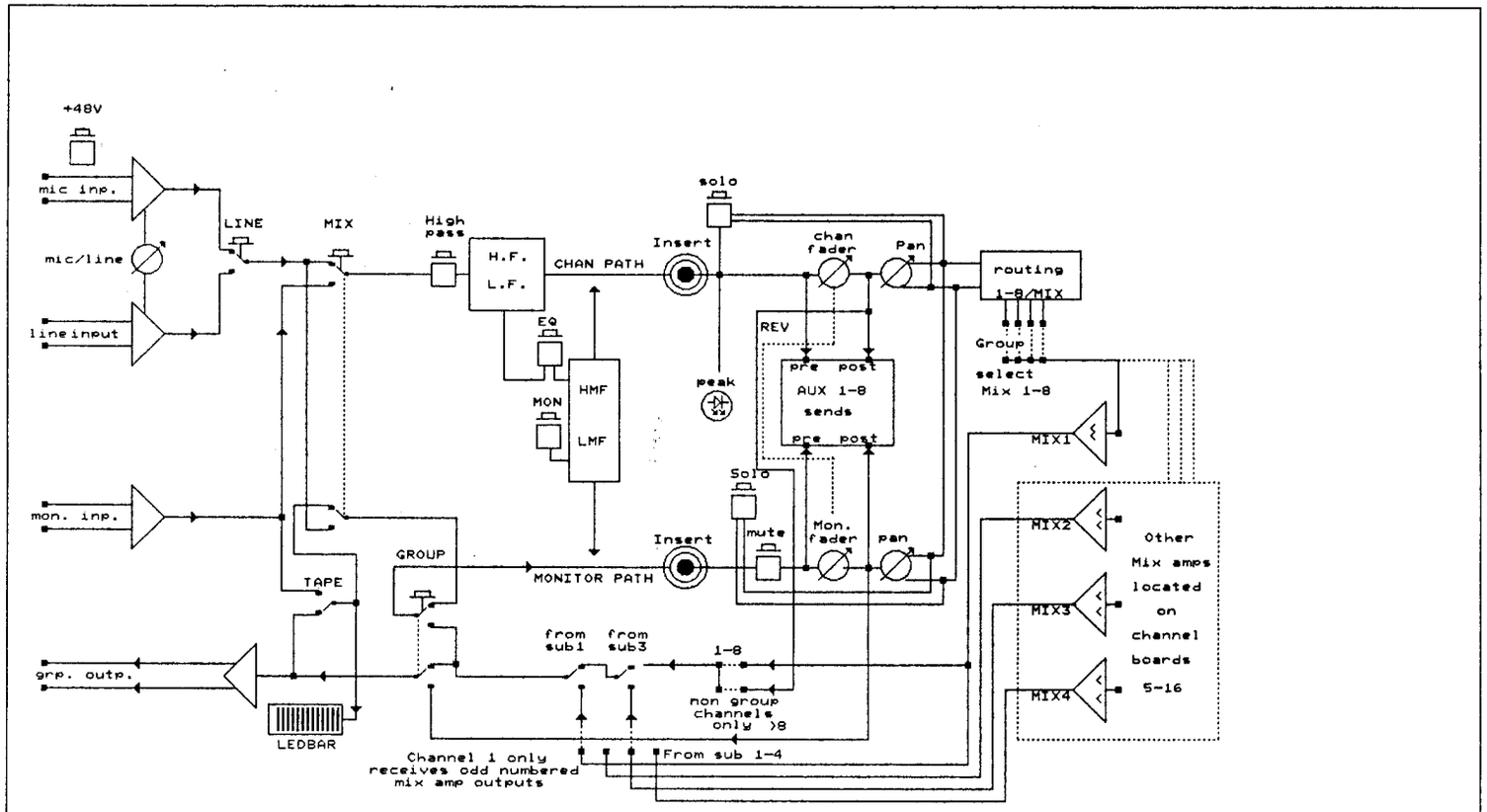

FILE:orionblk		
Title: ORION SERIES CHANNEL BLOCK DIAGRAM		
Size: A	Document Number: 1	REV
Date: October 4, 1991	Sheet of 1	

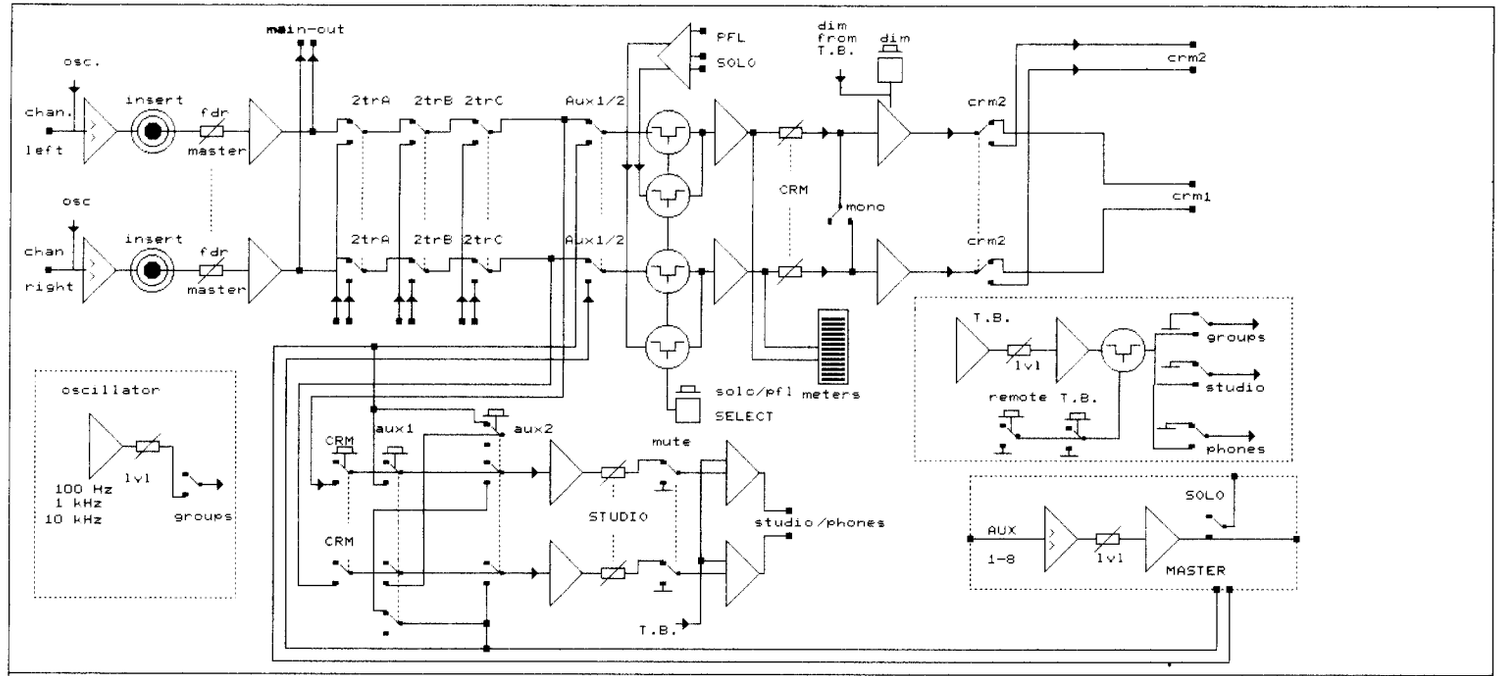

COPyRIGHT D&R. All rights reserved
This document may not be reproduced
in any form without the written permission of D&R

FILE:orionmst		
D&R Electronica b.v.		
Title: ORION MASTER BLOCKDIAGRAM		
Size: A	Document Number: 1	REV:
Date: February 19, 1992	Sheet 1 of 1	

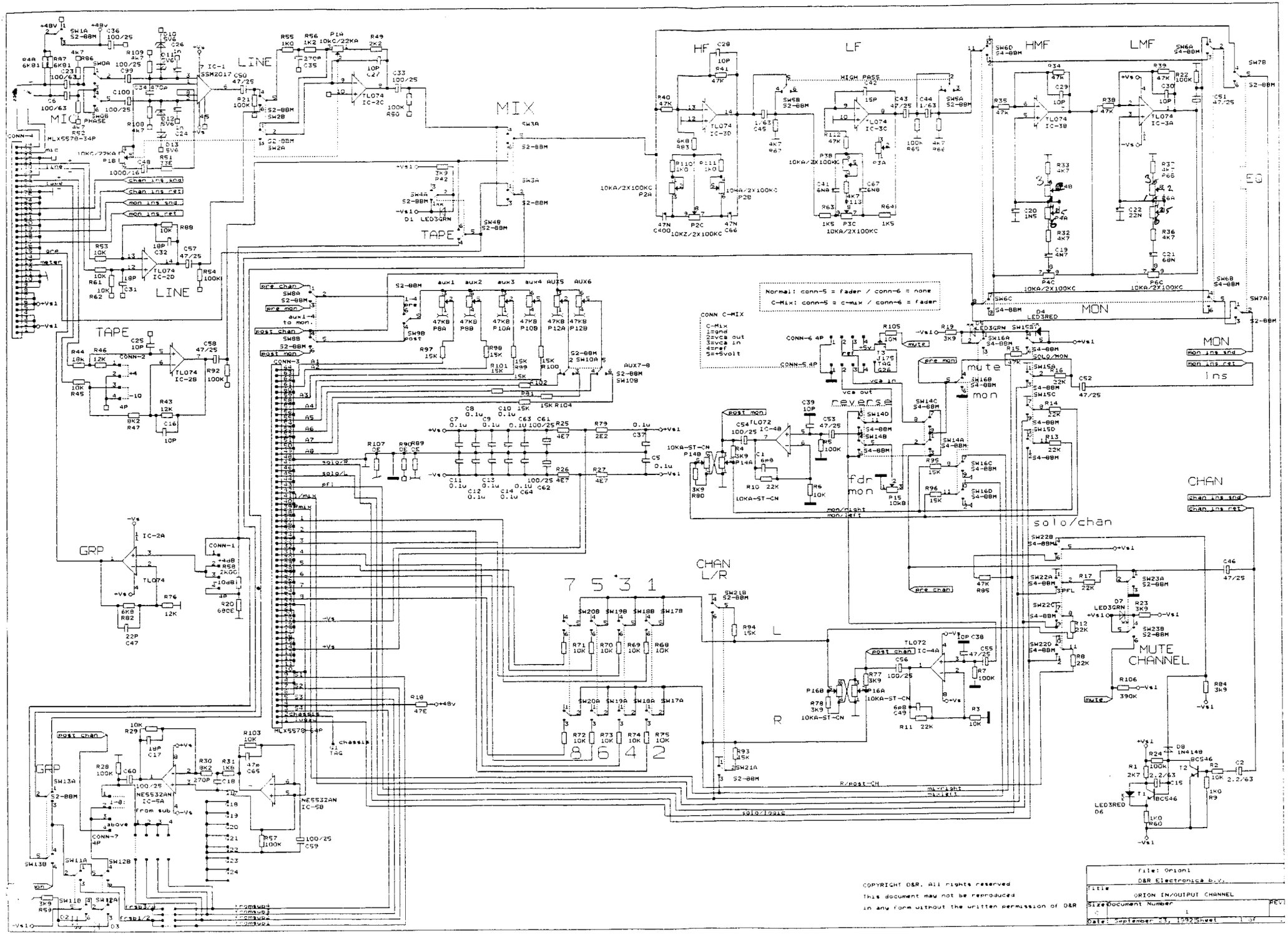
MIC
LINE
TAPE
MIX
HF
LF
HMF
LMF
EQ
MON
CHAN
GRP
CHAN L/R
MUTE CHANNEL
solo/chan
reverse
fdr mon
mute mon
ins
Normal: conn-5 = fader / conn-6 = none
C-Mix: conn-5 = c-mix / conn-6 = fader
CONN C-MIX
C-Mix
1=gnd
2=vca out
3=vca in
4=ref
5=+5volt
COPYRIGHT D&R. All rights reserved
This document may not be reproduced
in any form without the written permission of D&R
file: Orion1
D&R Electronica b.v.
Title
ORION IN/OUTPUT CHANNEL
Size
Document Number
1
Date: September 23, 1992
Sheet 1 of

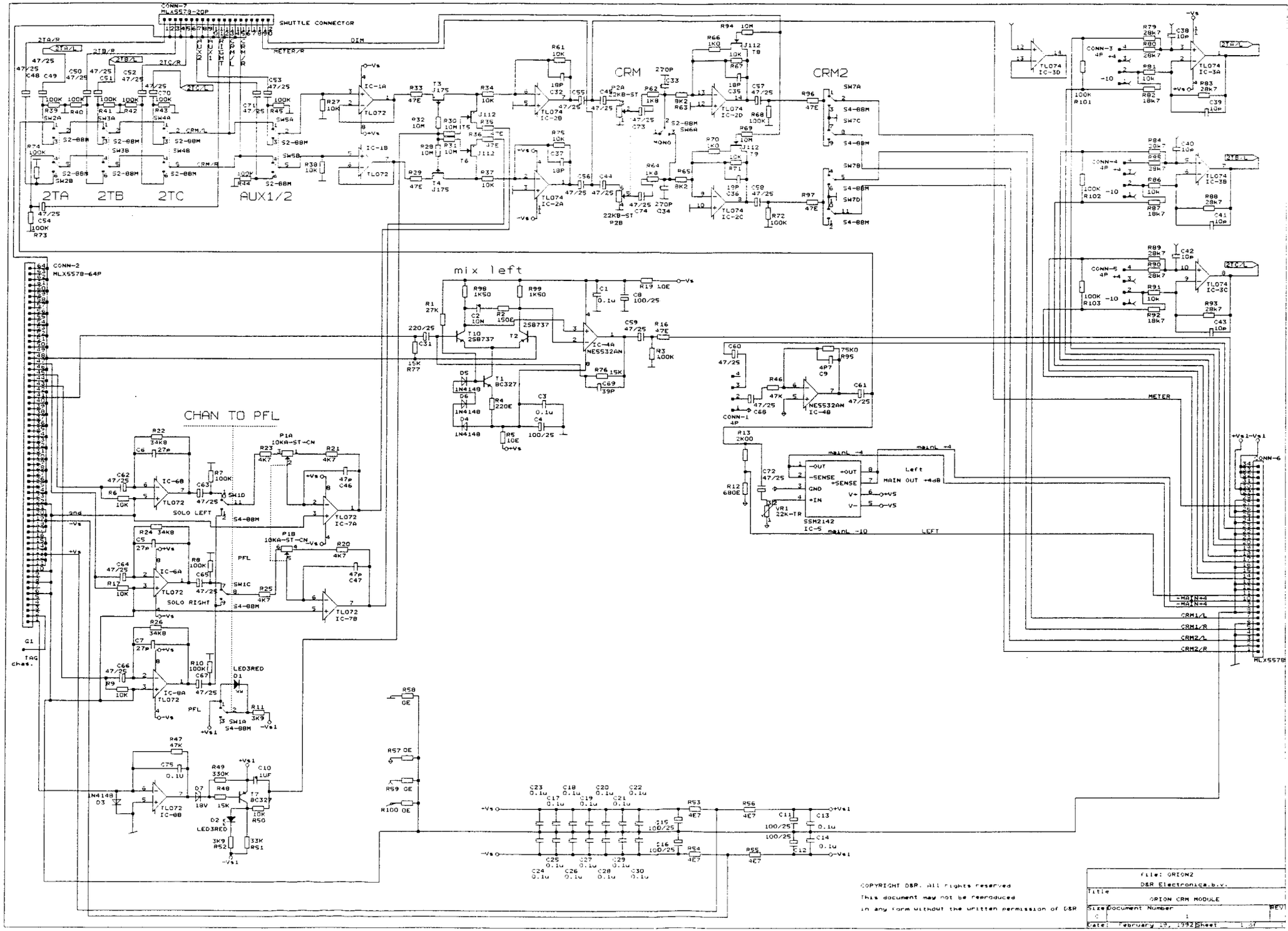
CONN-7
MLX5578-20P
SHUTTLE CONNECTOR
DIM
METER/R
2TA
2TB
2TC
AUX1/2
CRM
CRM2
mix left
CHAN TO PFL
CONN-2
MLX5578-64P
SOLO LEFT
SOLO RIGHT
PFL
METER
LEFT
MAIN OUT +4dB
CONN-6
MLX5578
CRM1/L
CRM1/R
CRM2/L
CRM2/R
TAG chas.
COPYRIGHT D&R. All rights reserved
This document may not be reproduced
in any form without the written permission of D&R
File: ORION2
D&R Electronics b.v.
Title
ORION CRM MODULE
Size: C
Document Number
REV: 1
Date: February 19, 1992
Sheet 1 of

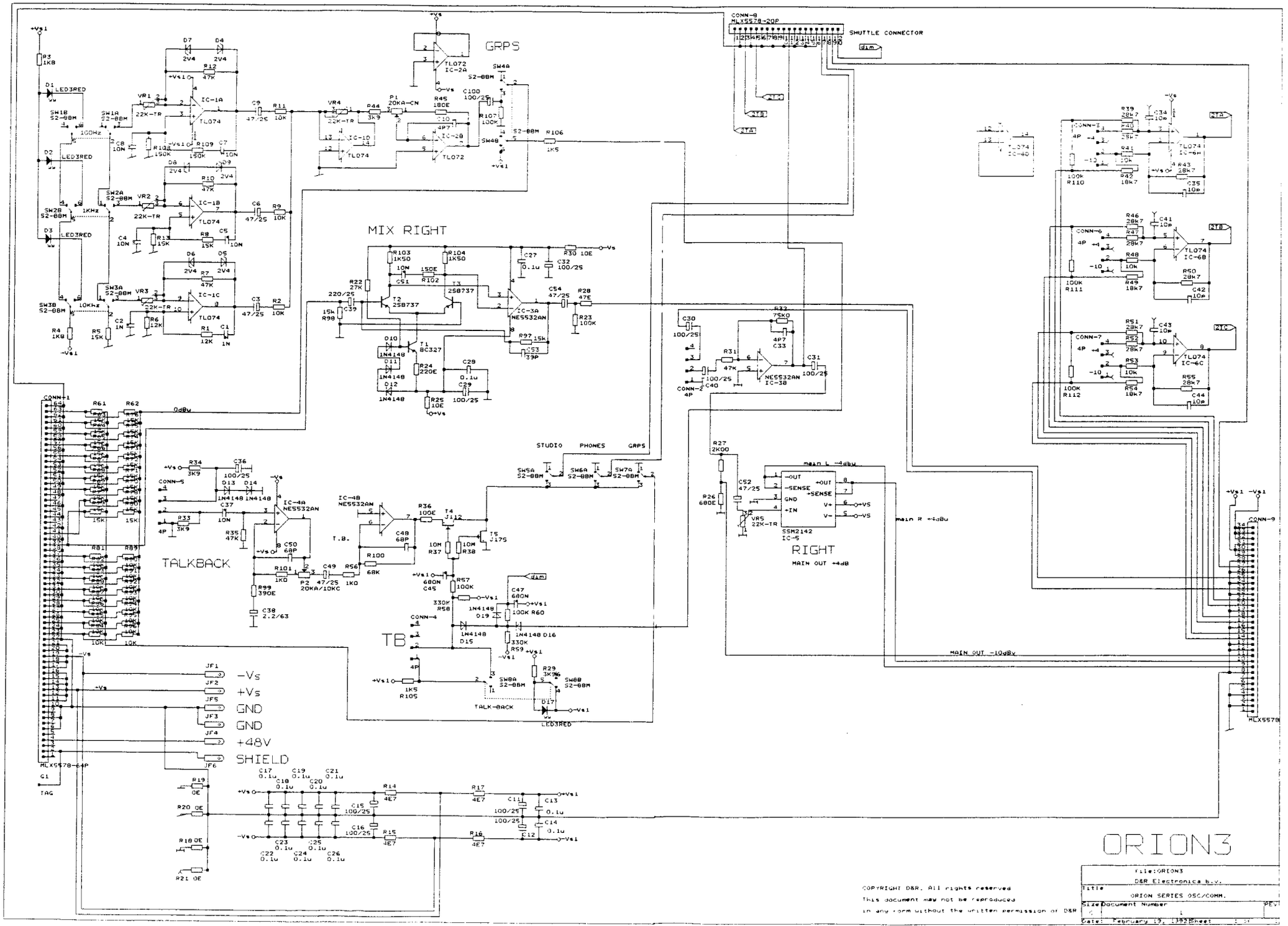
GRPS
MIX RIGHT
TALKBACK
TB
RIGHT
MAIN OUT +4dB
SHUTTLE CONNECTOR
STUDIO PHONES GRPS
-Vs
+Vs
GND
GND
+48V
SHIELD
ORION3
COPYRIGHT D&R. All rights reserved
This document may not be reproduced
in any form without the written permission of D&R
File:ORION3
D&R Electronica b.v.
Title ORION SERIES OSC/COMM.
Size Document Number
Date: February 19, 1992 Sheet

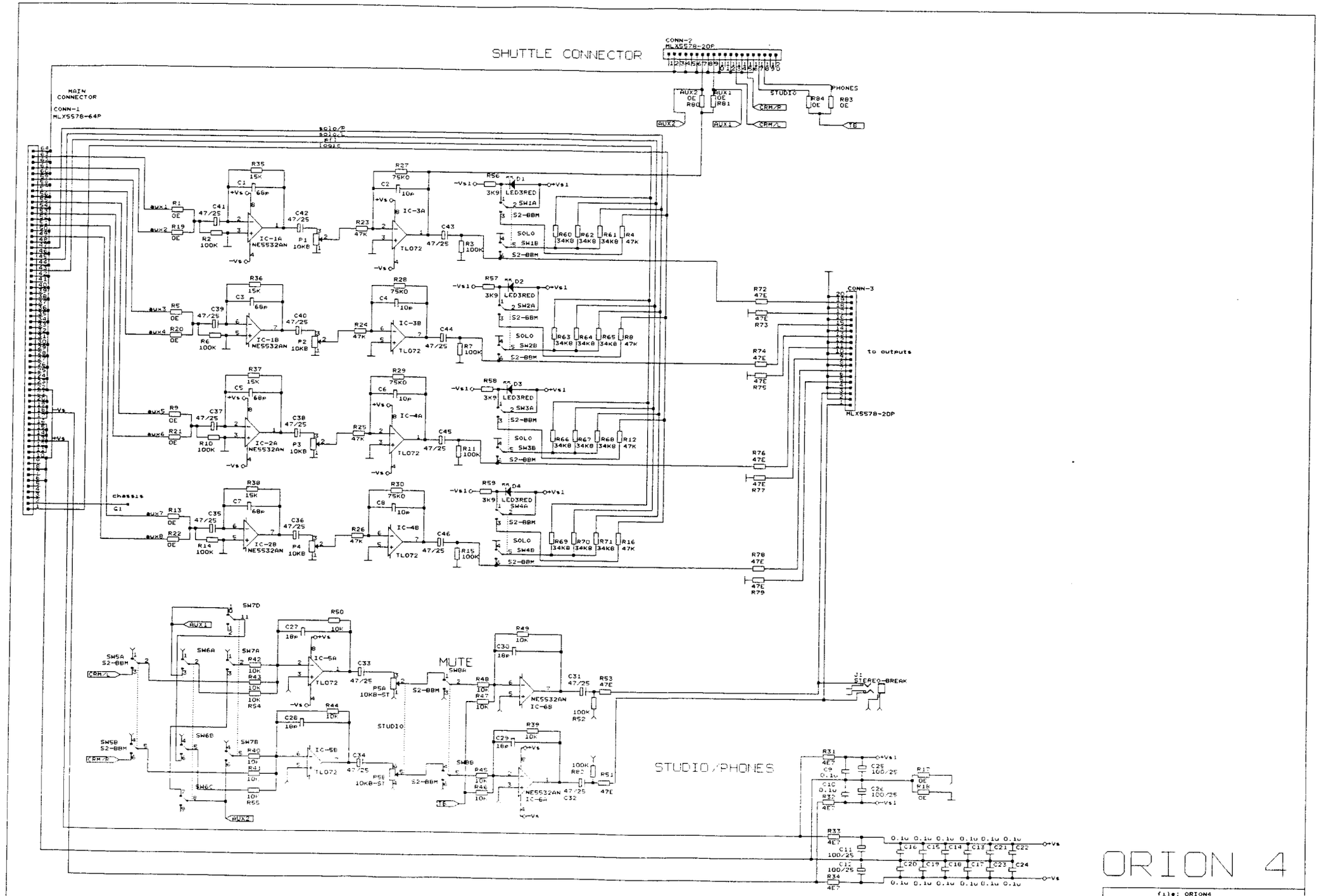

COPYRIGHT D&R. All rights reserved
This document may not be reproduced
in any form without the written permission of D&R

file: ORION4	
D&R Electronica b.v.	
Title	ORION SERIES AUX/PHONES
Size C	Document Number 1 — REV 1
Date: February 15, 1992	Sheet 1 of 1

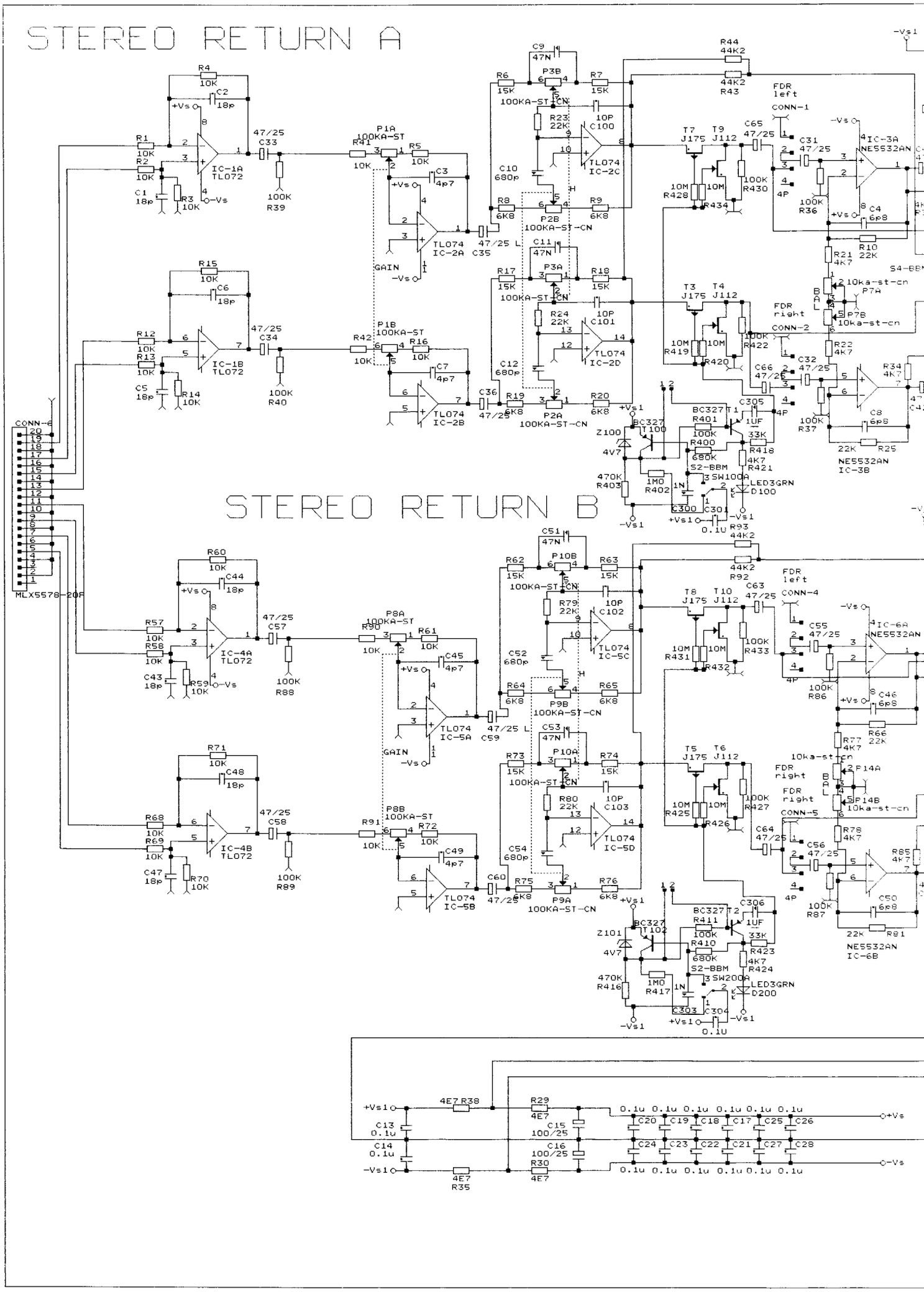
STEREO RETURN A
STEREO RETURN B
MLX5578-20P
CONN-6
IC-1A TL072
IC-1B TL072
IC-4A TL072
IC-4B TL072
TL074 IC-2A
TL074 IC-2B
TL074 IC-2C
TL074 IC-2D
TL074 IC-5A
TL074 IC-5B
TL074 IC-5C
TL074 IC-5D
IC-3A NE5532AN
IC-3B NE5532AN
IC-6A NE5532AN
IC-6B NE5532AN
FDR left
FDR right
CONN-1
CONN-2
CONN-4
CONN-5
GAIN
+Vs
-Vs
+Vs1
-Vs1
S4-BBM
S2-BBM
LED3GRN
10ka-st-cn
100KA-ST-CN
100KA-ST

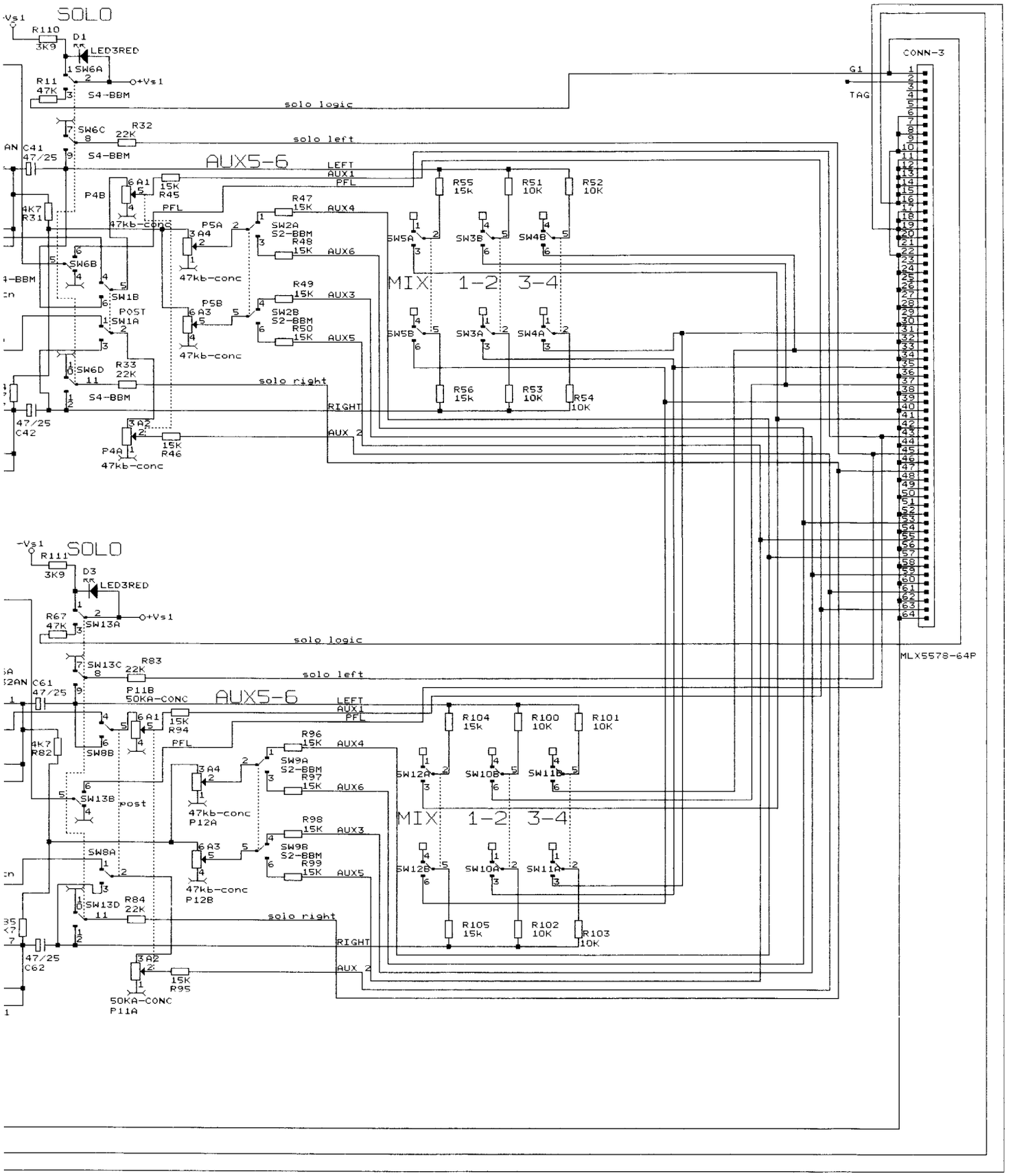

ORION 6 FX RETURN MODULE

COPYRIGHT D&R. All rights reserved
This document may not be reproduced
in any form without the written permission of D&R

FILE:ORION6		
D&R Electronica b.v.		
Size C	Document Number	REV
Date: May 25, 1993	Sheet 1 of 1	

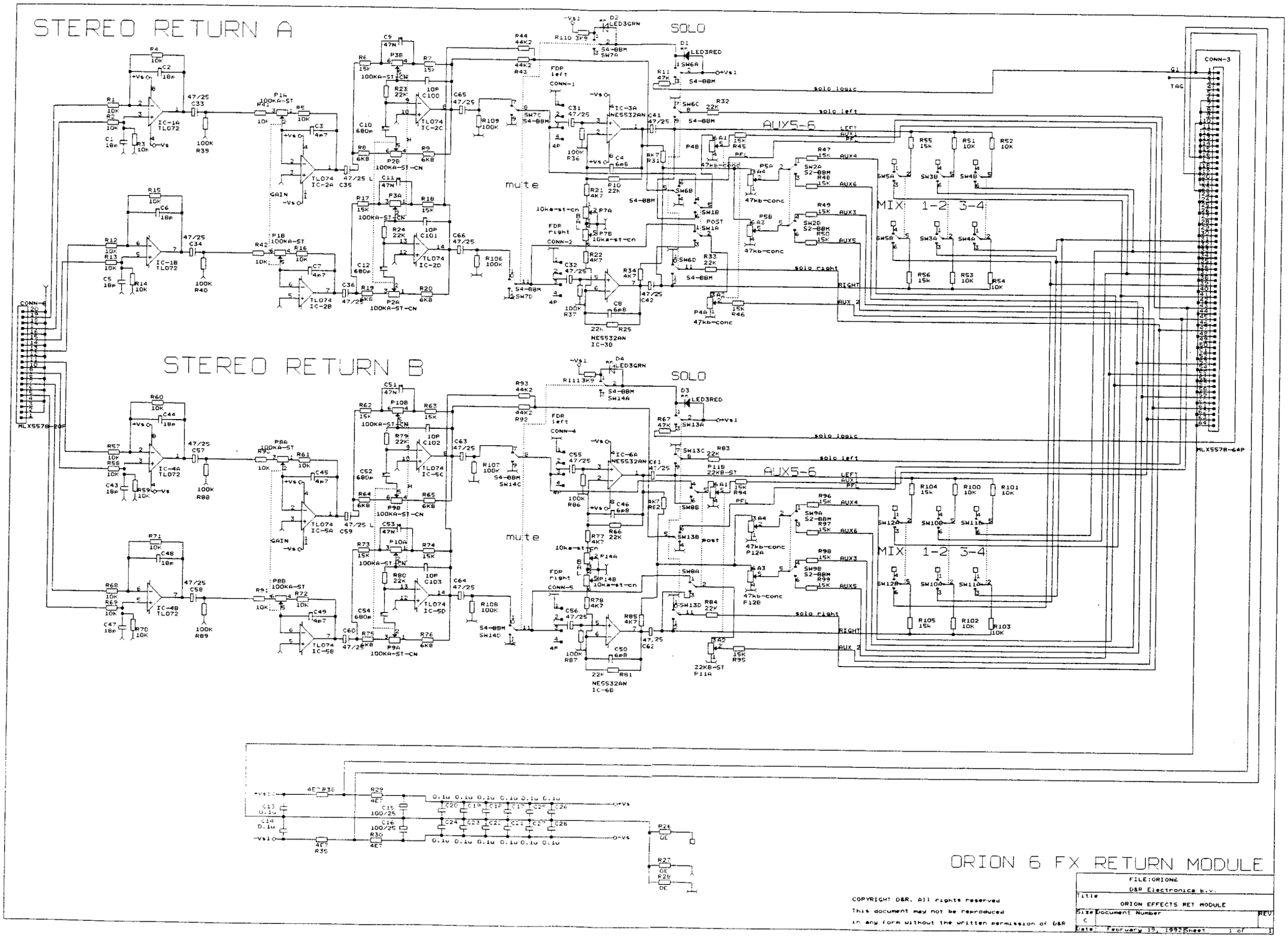

COPYRIGHT D&R. All rights reserved
This document may not be reproduced
in any form without the written permission of D&R

FILE:ORION6	
D&R Electronica b.v.	
Title	ORION EFFECTS RET MODULE
Size C	Document Number / REV
Date: February 19, 1992	Sheet 1 of 1

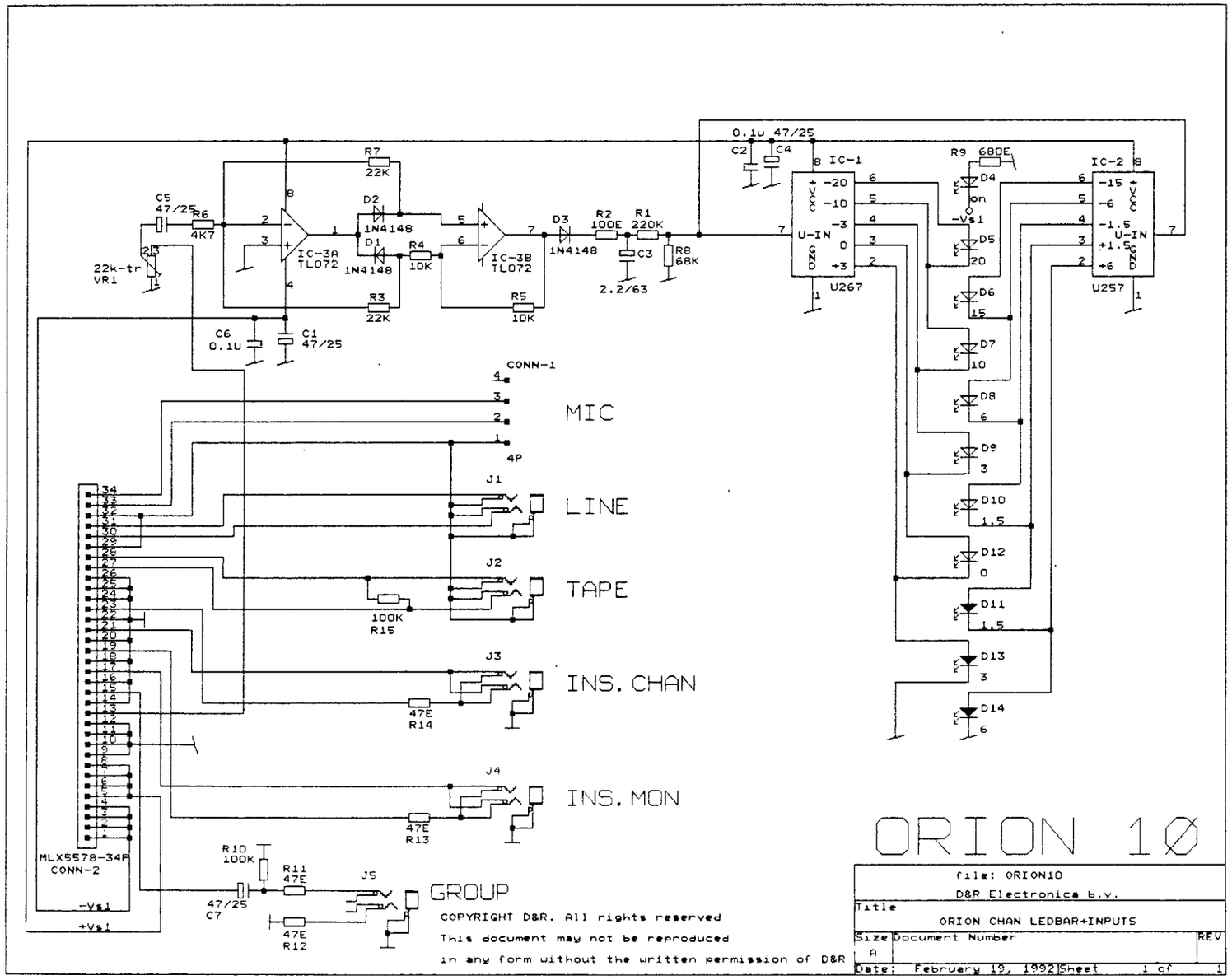

COPYRIGHT D&R. All rights reserved
This document may not be reproduced
in any form without the written permission of D&R

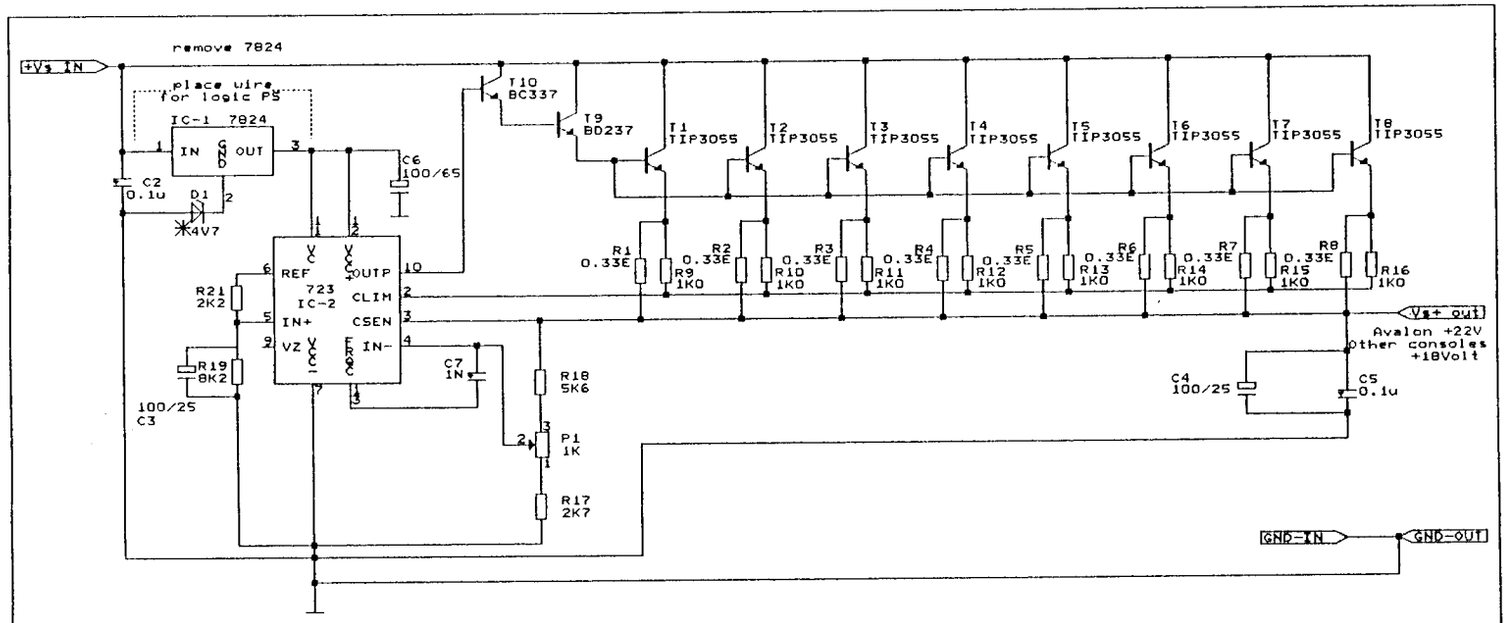

NEGATIVE SUPPLY IDENTICAL TO POSITIVE SUPPLY

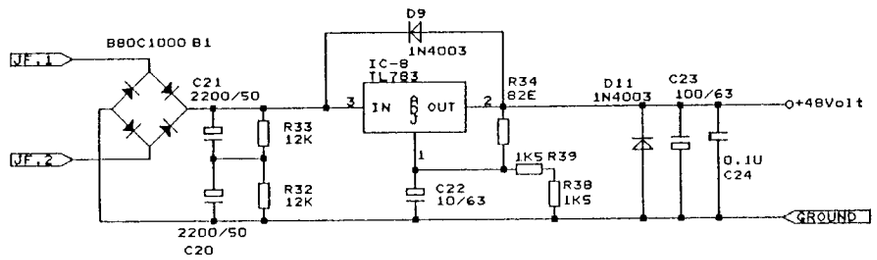

✳ Short diode for Marilon/Triton/Orion/Axion consoles

File: Power	
D&R Electronics b.v.	
Title: Power Supply regulator boards	
Size: A	Document Number:	REV:
Date: February 18, 1992	Sheet: of

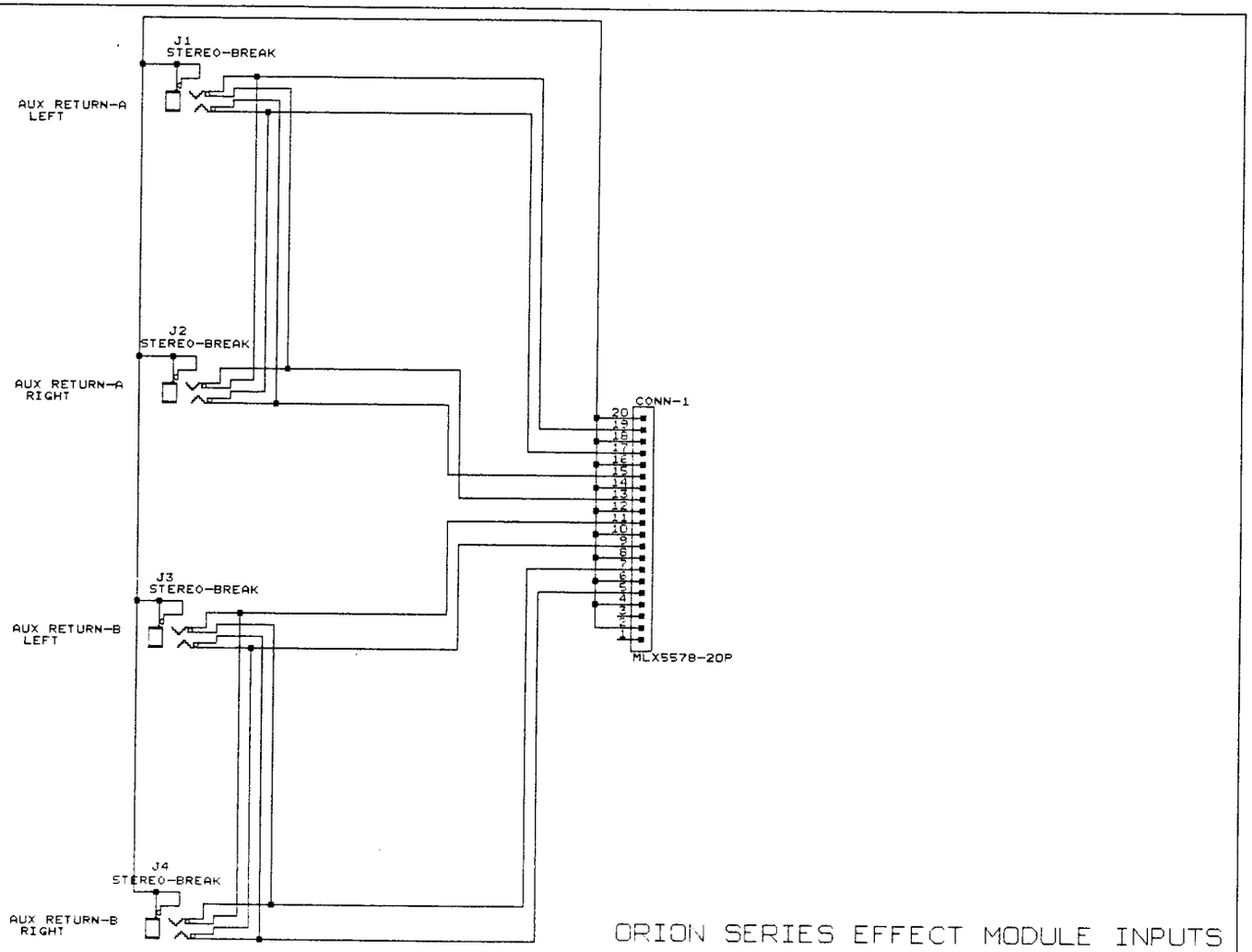

ORION SERIES EFFECT MODULE INPUTS

COPYRIGHT D&R. All rights reserved
This document may not be reproduced
in any form without the written permission of D&R

FILE: ORION60
D&R Electronics b.v.

Title
ORION SERIES FX RETURN MODULE INPUTS

Size A | Document Number | REV

Date: February 19, 1992 Sheet of

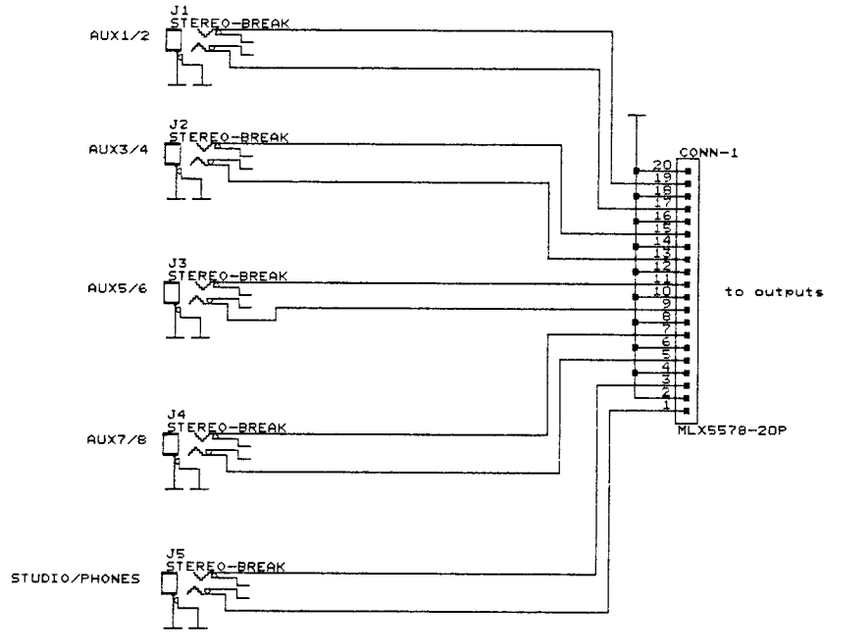

ORION40

COPYRIGHT D&R. All rights reserved
This document may not be reproduced
in any form without the written permission of D&R

FILE: ORION40
D&R Electronica b.v.

Title: ORION SERIES AUX OUTPUTS

Size: A | Document Number: | REV:

Date: February 19, 1992 | Sheet 1 of 1

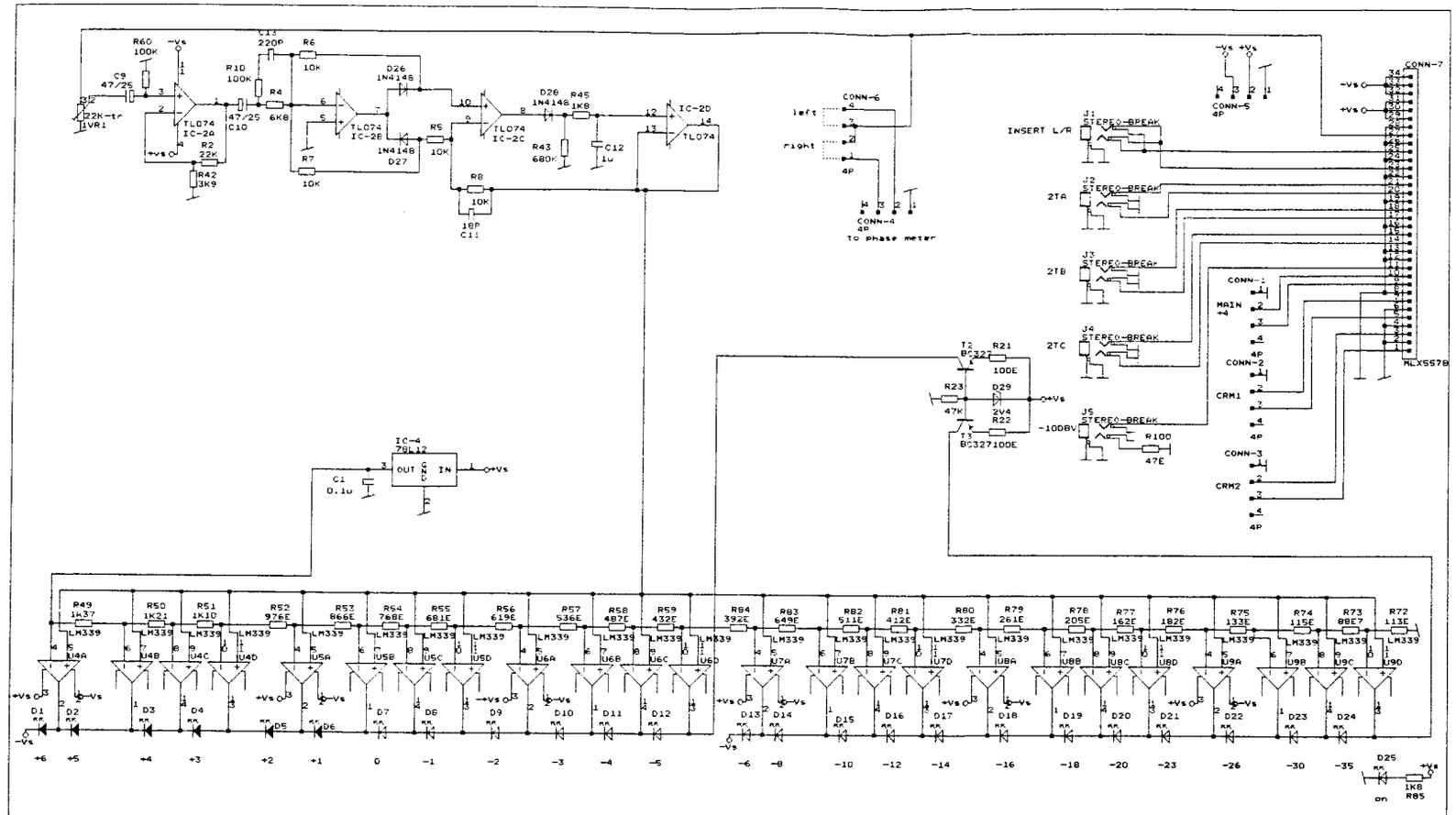

ORION 25 SEGMENT LEDBAR

COPYRIGHT D&R. All rights reserved
This document may not be reproduced
in any form without the written permission of D&R

file:orion20		
D&R Electronica b.v.		
Title	master ledbar Orion	
Size B	Document Number	REV 1
Date: February 19, 1992	Sheet 1 of 1	

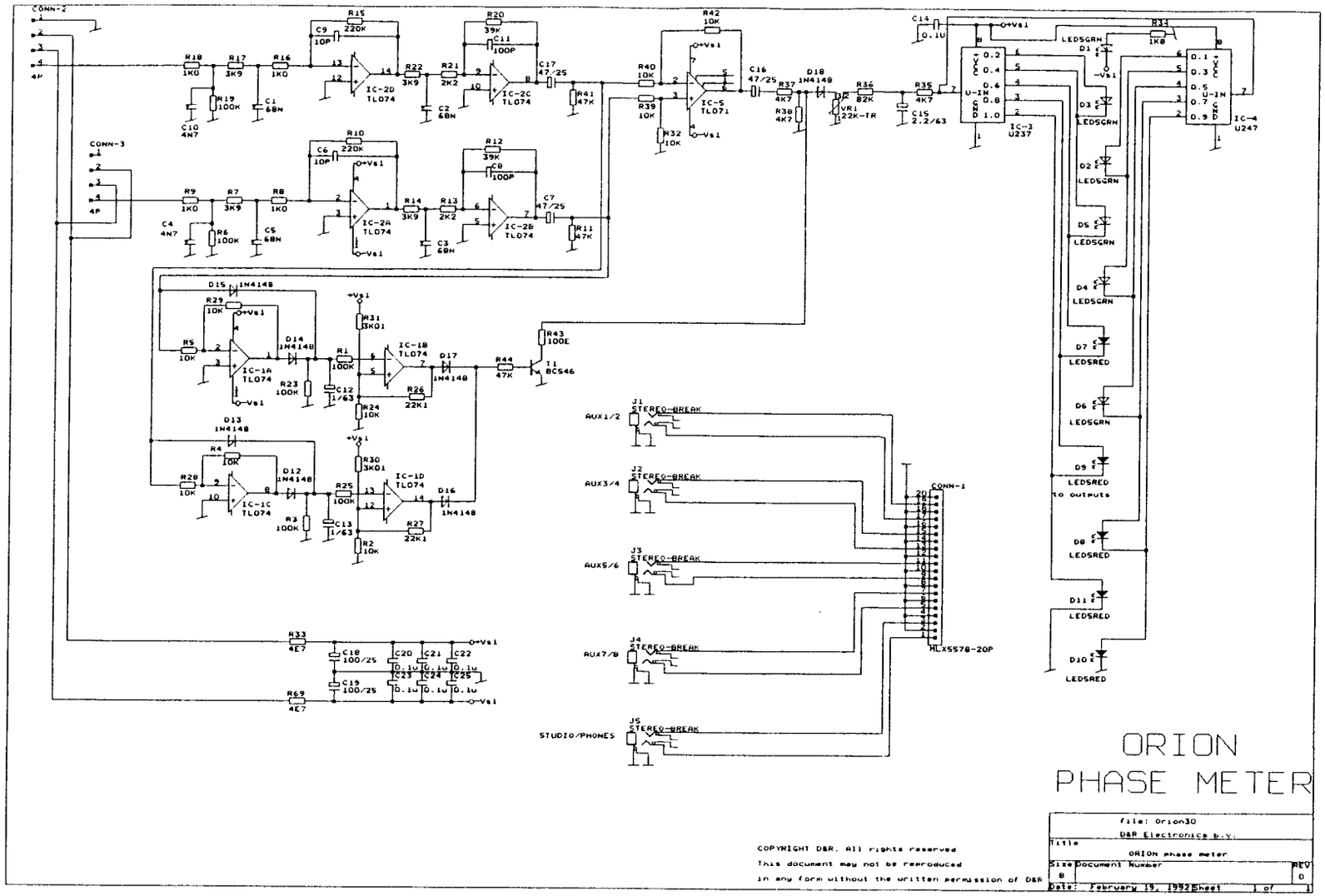
CONN-2
CONN-3
IC-2D TL074
IC-2C TL074
IC-2A TL074
IC-2B TL074
IC-5 TL071
IC-1A TL074
IC-1B TL074
IC-1C TL074
IC-1D TL074
IC-3 U237
IC-4 U247
CONN-1
MLX5578-20P
AUX1/2
AUX3/4
AUX5/6
AUX7/8
STUDIO/PHONES
STEREO-BREAK
to outputs
LEDSGRN
LEDSRED
ORION
PHASE METER
COPYRIGHT D&R. All rights reserved
This document may not be reproduced
in any form without the written permission of D&R
file: Orion30
D&R Electronics b.v.
ORION phase meter
Size B
Document Number
REV 0
Date: February 19, 1992 Sheet 1 of 1

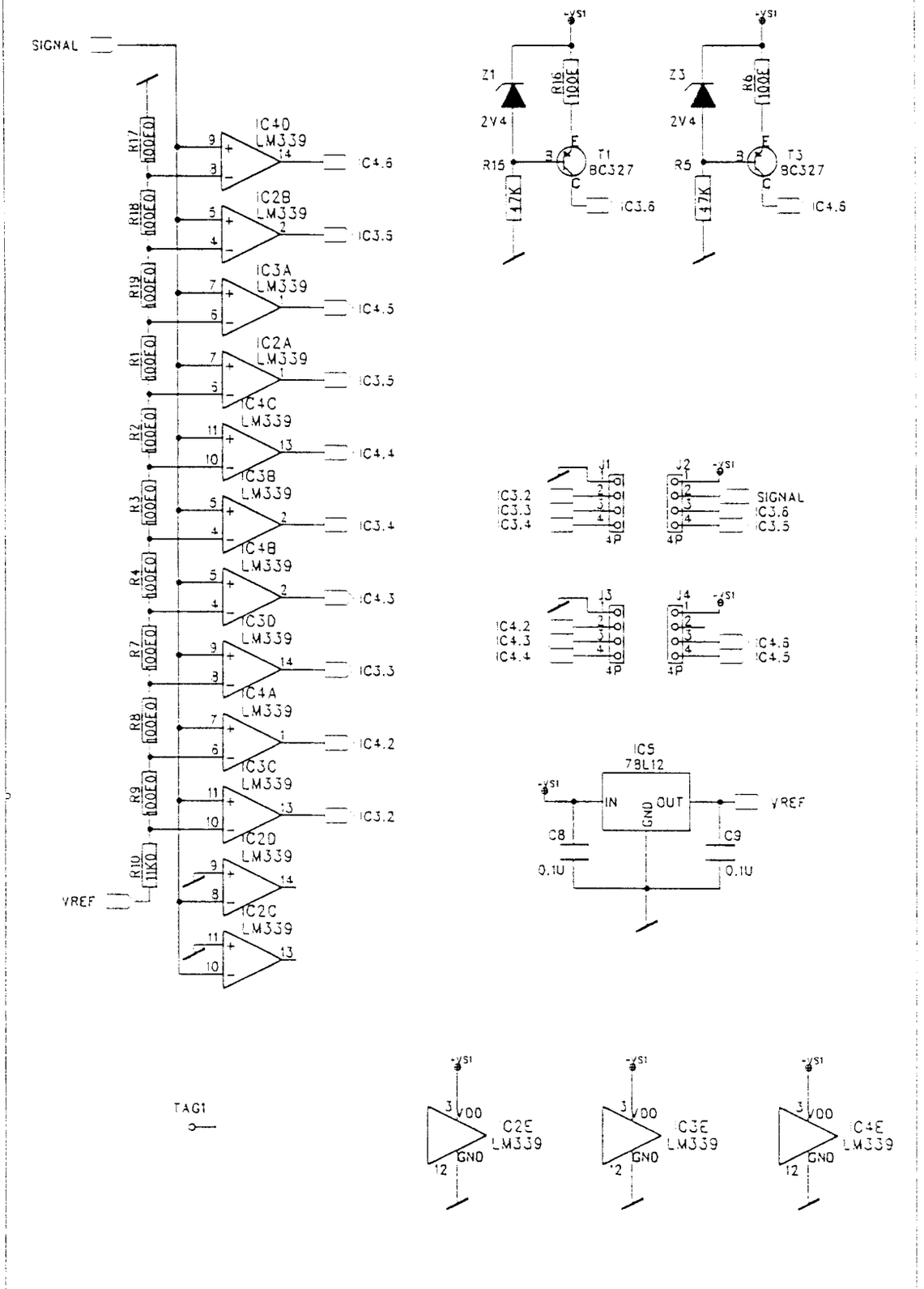

D&R Electronica B.V.
Rijnkade 15b
1382 GS Weesp
The Netherlands
phone: 02940-18014
fax: 02940-16987

Title: Orion 30 Opz

Date: 22-05-1996

Rev: P

Sheet: 1 of 1

Design: E.v.d.Krans

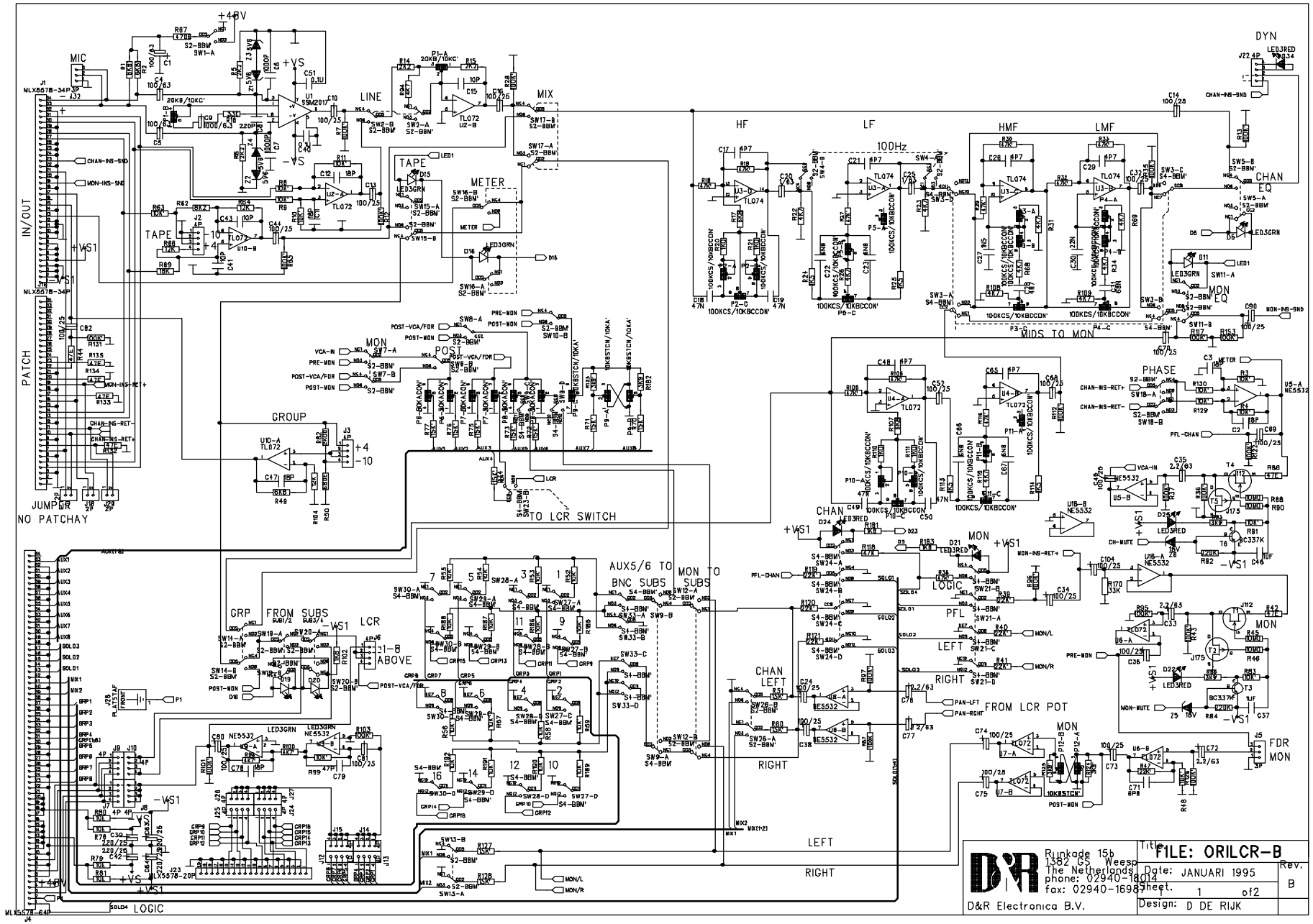

D&R Electronica B.V.
Rijnkade 15b
1382 GS Weesp
The Netherlands
phone: 02940-18014
fax: 02940-16987

Title: FILE: ORILCR-B

Date: JANUARI 1995

Sheet: 1 of 2

Design: D DE RIJK

Rev. B

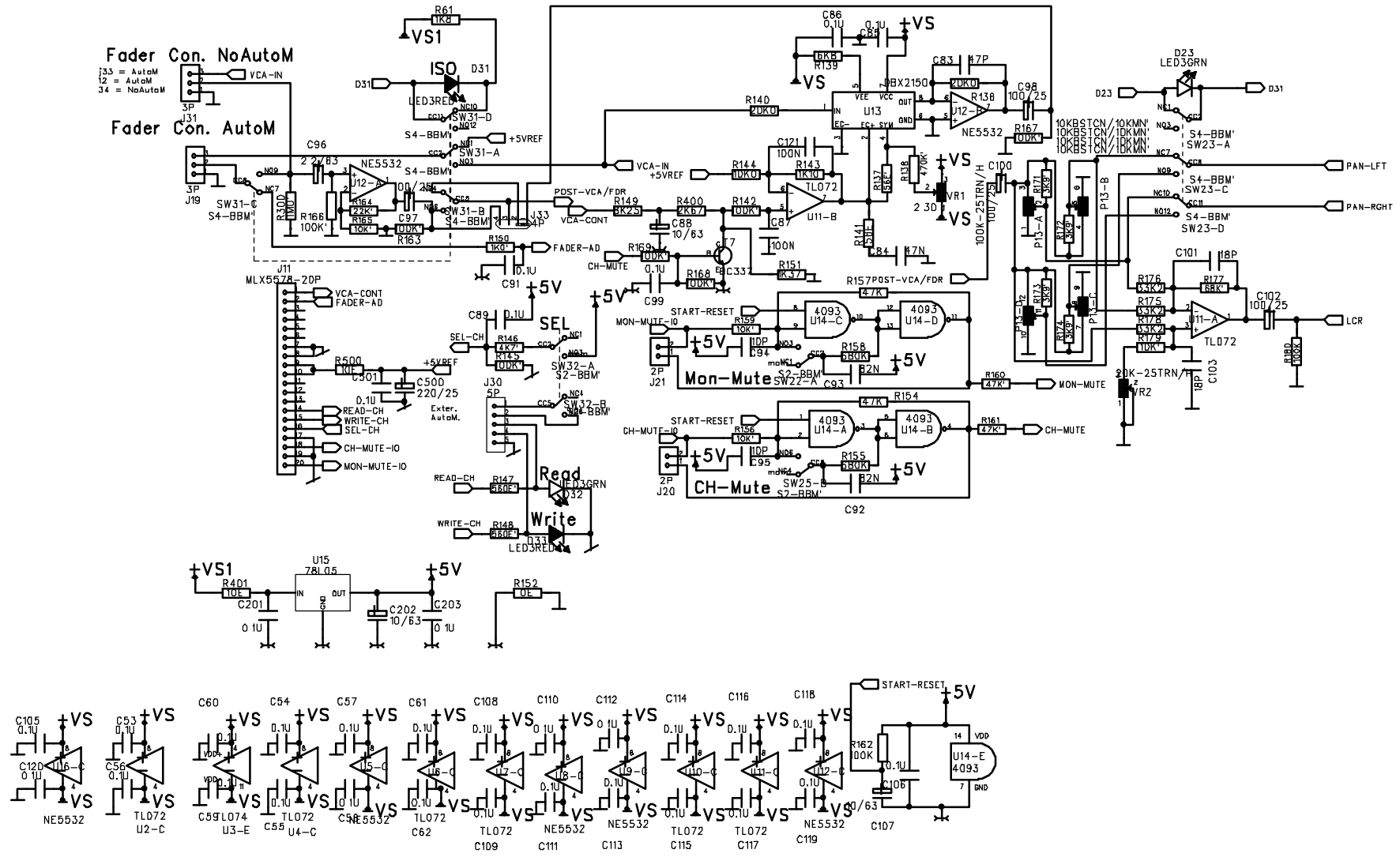

D&R Electronica B.V. Rijnkade 15b 1382 GS Weesp The Netherlands phone 02940-18014 fax 02940-16987	Title: Orion LCRS	
	Date: Jan. 1995	Rev: B
	Sheet: 2 of 2	
	Design: Jan Betten	

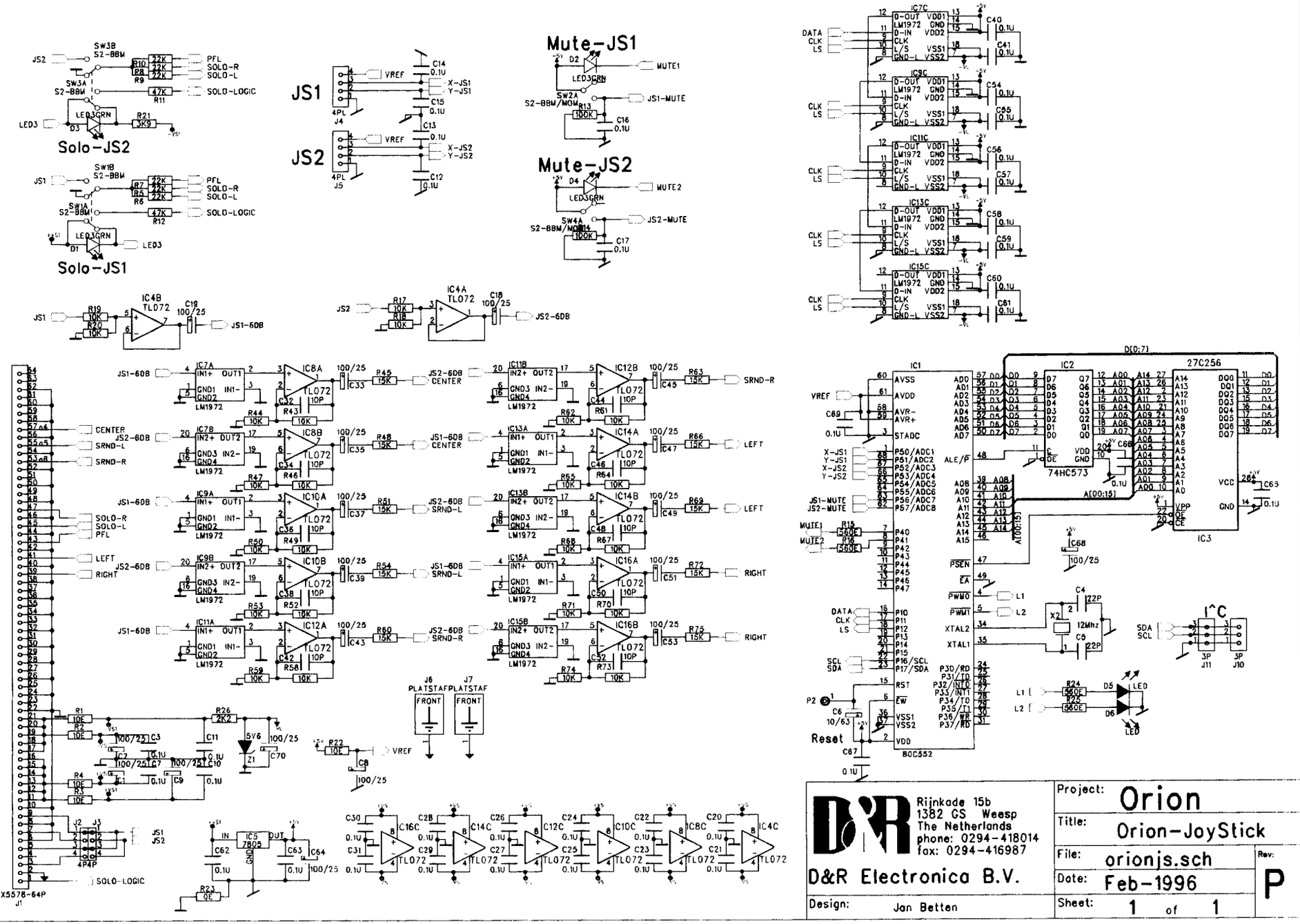
Solo-JS2
Solo-JS1
JS1
JS2
Mute-JS1
Mute-JS2
IC1
IC2
IC3
27C256
74HC573
80C552
Reset
I^C
MLX5578-64P
J1
J6
J7
PLATSTAF
FRONT
J4
J5
J11
J10
Rijnkade 15b
1382 GS Weesp
The Netherlands
phone: 0294-418014
fax: 0294-416987
D&R Electronica B.V.
Design: Jan Betten
Project: Orion
Title: Orion-JoyStick
File: orionjs.sch
Date: Feb-1996
Sheet: 1 of 1
Rev: P

60883210 Orion inline kanaal

Articlecode	Description	Quantity	Unit
..10350517	Weerstand 0E 5% 1/4W	13.0000	st
.10650159	Bandkabel 34p (R 1.27)	20.0000	cm
.10400213	Condensator ker 10p R2.5	6.0000	st
.10400215	Condensator ker 15p R2.5	1.0000	st
.10400216	Condensator ker 18p R2.5	3.0000	st
.10400217	Condensator ker 22p R2.5	3.0000	st
.10400221	Condensator ker 47p R2.5	1.0000	st
.10400230	Condensator ker 270p R2.5	2.0000	st
.10400232	Condensator ker 470p R2.5	1.0000	st
.10400240	Condensator ker 22n R5.0	2.0000	st
.10401241	Condensator ker 100nF/50V R5 T	12.0000	st
.10401246	Condensator poly 1n0 R5.0	4.0000	st
.10401247	Condensator poly 1n5 R5.0	1.0000	st
.10401268	Condensator poly 1uF R5.0	2.0000	st
.10401250	Condensator poly 4n7 R5.0	1.0000	st
.10401251	Condensator poly 6n8 R5.0	2.0000	st
.10400277	Condensator poly 22n R5.0	3.0000	st
.10401258	Condensator poly 47n R5.0	2.0000	st
.10401260	Condensator poly 68n R5.0	1.0000	st
.10250342	Diode 1N4148 (signaal)	1.0000	st
.10400279	Elco 1uF / 63V radiaal R5.0	2.0000	st
.10400287	Elco 47uF / 25V radiaal R5.0	12.0000	st
.10400292	Elco 100uF / 25V radiaal R5.0	11.0000	st
.10400302	Elco 100uF / 63V radiaal R5.0	3.0000	st
.10400280	Elco 2.2uF / 50V radiaal R5.0	2.0000	st
.10400303	Elco 1000uF / 10V radiaal R5.0	1.0000	st
.10250338	Fet J112 (N-channel switch)	2.0000	st
.10250017	Fet J175 (P-channel switch)	3.0000	st
.10600510	Header 2p 2.54 lock recht	2.0000	st
.10600512	Header 4p 2.54 lock recht	1.0000	st
.10600478	Header 4p 2.54 recht	8.0000	st
.10600513	Header 5p 2.54 lock recht	1.0000	st
.10600140	Header 34p 2.54 haaks	2.0000	st
.10600141	Header 64p 2.54 haaks	1.0000	st
.10250307	Ic NE-5532 AP TI (dual-opamp)	1.0000	st
.10250184	Ic SSM-2017 P (audio pre-amp)	1.0000	st
.10250305	Ic TL-074 CN TI (quad-opamp)	3.0000	st
.10600394	Ic-voet 8 pins (vork-contact)	2.0000	st
.10600395	Ic-voet 14 pins (vork-contact)	3.0000	st
.10300378	Potm.16 1x 10kA log	1.0000	st
.10300374	Potm.16 1x 20kB/1x 10kRD gain	1.0000	st
.10300371	Potm.16 2x 10kB cn lin	2.0000	st
.10300373	Potm.16 2x 50kA con	3.0000	st
.10300401	Potm.97 100kCx2/10kB CC	4.0000	st
.10200300	Print Orion-1/O inline-channel	1.0000	st
.10550400	Schakelaar Alps 2p-ns (2 x om)	18.0000	st
.10550395	Schakelaar Alps 2p-ns (moment)	2.0000	st
.10550401	Schakelaar Alps 4p-ns (4 x om)	4.0000	st
.10600414	Shunt 2p (mini-jumper)	5.0000	st
.10250333	Transistor BC-327/25 (pnp)	4.0000	st
.10250328	Transistor BC-546B (npn)	2.0000	st
.10350765	Weerstand 1M0 5% 1/4W	2.0000	st
.10350729	Weerstand 1k0 5% 1/4W	7.0000	st
.10350730	Weerstand 1k2 5% 1/4W	1.0000	st
.10350731	Weerstand 1k5 5% 1/4W	2.0000	st
.10350732	Weerstand 1k8 5% 1/4W	1.0000	st
.10350835	Weerstand 2k00 1% 1/4W	1.0000	st
.10350733	Weerstand 2k2 5% 1/4W	3.0000	st
.10350734	Weerstand 2k7 5% 1/4W	1.0000	st

60883210 Orion inline kanaal

Articlecode	Description	Quantity	Unit
.10350736	Weerstand 3k9 5% 1/4W	8.0000	st
.10350737	Weerstand 4k7 5% 1/4W	12.0000	st
.10350846	Weerstand 6K81 1% 1/4W	2.0000	st
.10350739	Weerstand 6k8 5% 1/4W	2.0000	st
.10350740	Weerstand 8k2 5% 1/4W	2.0000	st
.10350705	Weerstand 10E 5% 1/4W	4.0000	st
.10350776	Weerstand 10M0 5% 1/4W	5.0000	st
.10350741	Weerstand 10k 5% 1/4W	17.0000	st
.10351741	Weerstand 10k 1/8W 5%	2.0000	st
.10350742	Weerstand 12k 5% 1/4W	3.0000	st
.10350743	Weerstand 15k 5% 1/4W	12.0000	st
.10350744	Weerstand 18k 5% 1/4W	1.0000	st
.10350745	Weerstand 22k 5% 1/4W	6.0000	st
.10350711	Weerstand 33E 5% 1/4W	1.0000	st
.10350747	Weerstand 33k 5% 1/4W	2.0000	st
.10350713	Weerstand 47E 5% 1/4W	7.0000	st
.10350749	Weerstand 47k 5% 1/4W	13.0000	st
.10350753	Weerstand 100K 5% 1/4W	17.0000	st
.10350727	Weerstand 680E 5% 1/4W	1.0000	st
.10350763	Weerstand 680k 5% 1/4W	2.0000	st
.10250362	Zenerdiode 4V7 / 400mW	2.0000	st
.10250351	Zenerdiode 5V6 / 400mW	4.0000	st
10700615	Bout M 3 x 4 zwart	2.0000	st
10600171	Conn: 3p wrd: 1=blck/grn/red	1.0000	st
10450153	Deksel SiFam 11mm black/5bulk	2.0000	st
10450182	Deksel SiFam 11mm blue bulk	3.0000	st
10450195	Deksel SiFam 11mm gray bulk	4.0000	st
10450194	Deksel SiFam 11mm green bulk	1.0000	st
10450152	Deksel SiFam 11mm red/7 bulk	1.0000	st
10300089	Fader JP 100mm mono 10KA	1.0000	st
10100300	Front Orion- 1 (inline-chan)	1.0000	st
10500005	Isolatiekous 5.0mm rond (grys)	15.0000	cm
10700684	Kartelring M 10 (buitenvertan)	7.0000	st
10450251	Knop Druktoets 3.3 black-squar	6.0000	st
10450197	Knop Druktoets 3.3 grey-rectan	2.0000	st
10450253	Knop Druktoets 3.3 grey-square	10.0000	st
10450196	Knop Druktoets 3.3 red-rectang	2.0000	st
10450252	Knop Druktoets 3.3 red-square	4.0000	st
10450082	Knop Fader SiFam white (1.2x8)	1.0000	st
10450101	Knop SiFam grey Alps(bot15mm)	7.0000	st
10450100	Knop SiFam grey spli(top11mm)	7.0000	st
10450103	Knop SiFam grey splined(11mm)	4.0000	st
10250386	Led 3mm green SLR-03A210-020	4.0000	st
10250387	Led 3mm red SLR-03A510-020	3.0000	st
20850200	Print bestukt Orion- 1chan	1.0000	st

60883215 Orion LCR in-line channel

Articlecode	Description	Quantity	Unit
.10400209	Condensator ker 4p7 R2.5	6.0000	st
.10400211	Condensator ker 6p8 R2.5	1.0000	st
.10400213	Condensator ker 10p R2.5	5.0000	st
.10400216	Condensator ker 18p R2.5	8.0000	st
.10400221	Condensator ker 47p R2.5	2.0000	st
.10400229	Condensator ker 220p R2.5	1.0000	st
.10400236	Condensator ker 1000p R2.5	2.0000	st
.10401241	Condensator ker 100nF/50V R5 T	35.0000	st
.10401247	Condensator poly 1n5 R5.0	1.0000	st
.10401268	Condensator poly 1uF R5.0	2.0000	st
.10401250	Condensator poly 4n7 R5.0	1.0000	st
.10401251	Condensator poly 6n8 R5.0	4.0000	st
.10400277	Condensator poly 22n R5.0	1.0000	st
.10401258	Condensator poly 47n R5.0	5.0000	st
.10401260	Condensator poly 68n R5.0	1.0000	st
.10401242	Condensator poly 82n R5.0	2.0000	st
.10401261	Condensator poly 100n R5.0	2.0000	st
.10400279	Elco 1uF / 63V radiaal R5.0	2.0000	st
.10400284	Elco 10uF / 50V radiaal R5.0	3.0000	st
.10400292	Elco 100uF / 25V radiaal R5.0	27.0000	st
.10400302	Elco 100uF / 63V radiaal R5.0	3.0000	st
.10400280	Elco 2.2uF / 50V radiaal R5.0	6.0000	st
.10400290	Elco 220uF / 25V radiaal R5.0	5.0000	st
.10400303	Elco 1000uF / 10V radiaal R5.0	1.0000	st
.10250338	Fet J112 (N-channel switch)	2.0000	st
.10250017	Fet J175 (P-channel switch)	2.0000	st
.10600510	Header 2p 2.54 lock recht	2.0000	st
.10600511	Header 3p 2.54 lock recht	4.0000	st
.10600512	Header 4p 2.54 lock recht	1.0000	st
.10600478	Header 4p 2.54 recht	8.0000	st
.10600513	Header 5p 2.54 lock recht	1.0000	st
.10600449	Header 6p 3.96 Right Angle405	1.0000	st
.10600438	Header 16p 2.54 recht no box	2.0000	st
.10600456	Header 20p 2.54 haaks	2.0000	st
.10600140	Header 34p 2.54 haaks	2.0000	st
.10600141	Header 64p 2.54 haaks	1.0000	st
.10250005	Ic 4093B (snand)	1.0000	st
.10250317	Ic 78L05 TO92 SGS (volt.reg)	1.0000	st
.10250307	Ic NE-5532 AP TI (dual-opamp)	5.0000	st
.10250184	Ic SSM-2017 P (audio pre-amp)	1.0000	st
.10250032	Ic THAT 2180-LBE VCA	1.0000	st
.10250304	Ic TL-072 CP TI (dual-opamp)	6.0000	st
.10250305	Ic TL-074 CN TI (quad-opamp)	1.0000	st
.10600394	Ic-voet 8 pins (vork-contact)	12.0000	st
.10600402	Ic-voet 8 pins SIL 2.54mm	1.0000	st
.10600395	Ic-voet 14 pins (vork-contact)	2.0000	st
.10300203	Instelpot 25-turn 100k H T93YB	1.0000	st
.10300200	Instelpot 25-turn 20k H T93YB	1.0000	st
.10300390	Potm.16 10KB/10KB/10KM/10KN/cc	1.0000	st
.10300374	Potm.16 1x 20kB/1x 10kRD gain	1.0000	st
.10300371	Potm.16 2x 10kB cn lin	1.0000	st
.10300373	Potm.16 2x 50kA con	3.0000	st
.10300401	Potm.97 100kCx2/10kB CC	6.0000	st
.10300402	Potm.97 10kBx2 CC / 10KA	1.0000	st
.10200304	Print Orion-LCR/c(inline auto)	1.0000	st
.10201365	Print RK16>Rk97	6.0000	st
.10550205	Schakelaar Alps 2p mini MOMENT	3.0000	st
.10550414	Schakelaar Alps 2pole mini NS	19.0000	st
.10550415	Schakelaar Alps 4pole mini NS	11.0000	st

60883215 Orion LCR in-line channel

Articlecode	Description	Quantity	Unit
.10600414	Shunt 2p (mini-jumper)	10.0000	st
.10250332	Transistor BC-337/25 tape(npn)	3.0000	st
.10351765	Weerstand 1M0 1/8W 5%	1.0000	st
.10351729	Weerstand 1k0 1/8W 5%	1.0000	st
.10350827	Weerstand 1k10 1% 1/4W	1.0000	st
.10350732	Weerstand 1k8 5% 1/4W	4.0000	st
.10351737	Weerstand 4k7 1/8W 5%	3.0000	st
.10350739	Weerstand 6k8 5% 1/4W	4.0000	st
.10351741	Weerstand 10k 1/8W 5%	33.0000	st
.10350848	Weerstand 10k0 1% 1/4W	1.0000	st
.10351743	Weerstand 15k 1/8W 5%	12.0000	st
.10350856	Weerstand 20k0 1% 1/4W	2.0000	st
.10351745	Weerstand 22k 1/8W 5%	10.0000	st
.10350862	Weerstand 33k2 1% 1/4W	3.0000	st
.10350714	Weerstand 56E 5% 1/4W	1.0000	st
.10351753	Weerstand 100k 1/8W 5%	27.0000	st
.10351761	Weerstand 470k 1/8W 5%	1.0000	st
.10250351	Zenerdiode 5V6 / 400mW	4.0000	st
.10250350	Zenerdiode 18V0 / 400mW	2.0000	st
10600173	Conn: 3p wrd:2U084-018-0387	2.0000	st
10450153	Deksel SiFam 11mm black/5bulk	2.0000	st
10450182	Deksel SiFam 11mm blue bulk	3.0000	st
10450195	Deksel SiFam 11mm gray bulk	5.0000	st
10450194	Deksel SiFam 11mm green bulk	1.0000	st
10450152	Deksel SiFam 11mm red/7 bulk	2.0000	st
10300089	Fader JP 100mm mono 10KA	1.0000	st
10300091	Fader JP 51MM ST SV5102S20AU	1.0000	st
10100309	Front Orion LCR-a (in-line)	1.0000	st
10500005	Isolatiekous 5.0mm rond (grys)	30.0000	cm
10700684	Kartelring M 10 (buitenvertan)	10.0000	st
10450209	Knop Druktoets 2.8 black-squar	11.0000	st
10450211	Knop Druktoets 2.8 grey-rectan	2.0000	st
10450208	Knop Druktoets 2.8 grey-square	15.0000	st
10450212	Knop Druktoets 2.8 red -rectan	2.0000	st
10450210	Knop Druktoets 2.8 red-square	3.0000	st
10450082	Knop Fader SiFam white (1.2x8)	2.0000	st
10450101	Knop SiFam grey Alps(bot15mm)	10.0000	st
10450100	Knop SiFam grey spli(top11mm)	10.0000	st
10450103	Knop SiFam grey splined(11mm)	3.0000	st
10250386	Led 3mm green SLR-03A210-020	8.0000	st
10250387	Led 3mm red SLR-03A510-020	7.0000	st
10700690	Platstaf 25 x 10 x 10mm	1.0000	st
10700611	Popnagel 3.0 x 6.5 blank	2.0000	st
20851236	Print bestukt Orion-LCR inline	1.0000	st
10700786	Taptite M3x5 verzkop/pozidr/zw	4.0000	st
10700790	Taptite M3x6 verzkop/pozidr/zw	1.0000	st

60883212 Orion effect stereo kanaal

Articlecode	Description	Quantity	Unit
..10350517	Weerstand 0E 5% 1/4W	1.0000	st
.10400209	Condensator ker 4p7 R2.5	8.0000	st
.10400211	Condensator ker 6p8 R2.5	4.0000	st
.10400216	Condensator ker 18p R2.5	8.0000	st
.10401241	Condensator ker 100nF/50V R5 T	16.0000	st
.10401246	Condensator poly 1n0 R5.0	2.0000	st
.10401268	Condensator poly 1uF R5.0	2.0000	st
.10401258	Condensator poly 47n R5.0	4.0000	st
.10401245	Condensator poly 680p R5.0	4.0000	st
.10400287	Elco 47uF / 25V radiaal R5.0	20.0000	st
.10400292	Elco 100uF / 25V radiaal R5.0	2.0000	st
.10250338	Fet J112 (N-channel switch)	4.0000	st
.10250017	Fet J175 (P-channel switch)	4.0000	st
.10600510	Header 2p 2.54 lock recht	2.0000	st
.10600511	Header 3p 2.54 lock recht	4.0000	st
.10600456	Header 20p 2.54 haaks	2.0000	st
.10600141	Header 64p 2.54 haaks	1.0000	st
.10250307	Ic NE-5532 AP TI (dual-opamp)	2.0000	st
.10250304	Ic TL-072 CP TI (dual-opamp)	2.0000	st
.10250305	Ic TL-074 CN TI (quad-opamp)	2.0000	st
.10600394	Ic-voet 8 pins (vork-contact)	4.0000	st
.10600395	Ic-voet 14 pins (vork-contact)	2.0000	st
.10600432	Jack chassis break	4.0000	st
.10300371	Potm.16 2x 10kB cn lin	2.0000	st
.10300373	Potm.16 2x 50kA con	4.0000	st
.10300375	Potm.16 2x100kB cn lin	6.0000	st
.10200305	Print Orion- 6M (dual-return)	1.0000	st
.10200317	Print Orion-60a (dual-ret i/o)	1.0000	st
.10550400	Schakelaar Alps 2p-ns (2 x om)	10.0000	st
.10550395	Schakelaar Alps 2p-ns (moment)	2.0000	st
.10550401	Schakelaar Alps 4p-ns (4 x om)	2.0000	st
.10250333	Transistor BC-327/25 (pnp)	4.0000	st
.10350701	Weerstand 1E0 5% 1/4W	1.0000	st
.10350765	Weerstand 1M0 5% 1/4W	2.0000	st
.10350736	Weerstand 3k9 5% 1/4W	2.0000	st
.10350704	Weerstand 4E7 5% 1/4W	3.0000	st
.10350737	Weerstand 4k7 5% 1/4W	10.0000	st
.10350739	Weerstand 6k8 5% 1/4W	8.0000	st
.10350776	Weerstand 10M0 5% 1/4W	8.0000	st
.10350741	Weerstand 10k 5% 1/4W	24.0000	st
.10351741	Weerstand 10k 1/8W 5%	8.0000	st
.10350743	Weerstand 15k 5% 1/4W	20.0000	st
.10351743	Weerstand 15k 1/8W 5%	4.0000	st
.10350745	Weerstand 22k 5% 1/4W	7.0000	st
.10351745	Weerstand 22k 1/8W 5%	6.0000	st
.10350747	Weerstand 33k 5% 1/4W	2.0000	st
.10350883	Weerstand 44k2 1% 1/4W	4.0000	st
.10350749	Weerstand 47k 5% 1/4W	4.0000	st
.10350753	Weerstand 100K 5% 1/4W	12.0000	st
.10350758	Weerstand 270k 5% 1/4W	2.0000	st
.10350763	Weerstand 680k 5% 1/4W	2.0000	st
.10250362	Zenerdiode 4V7 / 400mW	2.0000	st
10100325	Achterplaat Orion-26/D dualret	0.5000	st
10650448	Bandkabel 20p (R 1.27)	45.0000	cm
10600470	Conn 20p fem bandkabel	2.0000	st
10600173	Conn: 3p wrd:2U084-018-0387	4.0000	st
10450153	Deksel SiFam 11mm black/5bulk	2.0000	st
10450182	Deksel SiFam 11mm blue bulk	2.0000	st
10450195	Deksel SiFam 11mm gray bulk	6.0000	st

60883212 Orion effect stereo kanaal

Articlecode	Description	Quantity	Unit
10450152	Deksel SiFam 11mm red/7 bulk	2.0000	st
10300088	Fader ALPS-st10k RS60N12 horDC	2.0000	st
10100305	Front Orion- 6 (dual-return)	1.0000	st
10600436	Jack moer	4.0000	st
10700684	Kartelring M 10 (buitenvertan)	4.0000	st
10450251	Knop Druktoets 3.3 black-squar	2.0000	st
10450197	Knop Druktoets 3.3 grey-rectan	2.0000	st
10450253	Knop Druktoets 3.3 grey-square	8.0000	st
10450196	Knop Druktoets 3.3 red-rectang	2.0000	st
10450082	Knop Fader SiFam white (1.2x8)	2.0000	st
10450101	Knop SiFam grey Alps(bot15mm)	4.0000	st
10450100	Knop SiFam grey spli(top11mm)	4.0000	st
10450103	Knop SiFam grey splined(11mm)	8.0000	st
10500683	Krimpkous 3.2>1.6 zwart	12.0000	cm
10250386	Led 3mm green SLR-03A210-020	2.0000	st
10250387	Led 3mm red SLR-03A510-020	2.0000	st
20850205	Print bestukt Orion- 6(return)	1.0000	st
20850217	Print bestukt Orion-60(return)	1.0000	st
10700786	Taptite M3x5 verzkop/pozidr/zw	4.0000	st
10700787	Taptite M3x6 bolkoppozidr/zwrt	4.0000	st
10700681	Tywrap kort 94 mm blank	2.0000	st

60883230 Orion Ledbar 11 segm.

Articlecode	Description	Quantity	Unit
.10400213	Condensator ker 10p R2.5	2.0000	st
.10401241	Condensator ker 100nF/50V R5 T	7.0000	st
.10250342	Diode 1N4148 (signaal)	4.0000	st
.10400287	Elco 47uF / 25V radiaal R5.0	2.0000	st
.10400292	Elco 100uF / 25V radiaal R5.0	2.0000	st
.10400280	Elco 2.2uF / 50V radiaal R5.0	1.0000	st
.10600511	Header 3p 2.54 lock recht	1.0000	st
.10600478	Header 4p 2.54 recht	1.0000	st
.10600142	Header 34p 2.54 straight	1.0000	st
.10250325	Ic 78L12 TO92 SGS (volt.reg)	1.0000	st
.10250316	Ic LM-339 (comparator)	3.0000	st
.10250304	Ic TL-072 CP TI (dual-opamp)	1.0000	st
.10600394	Ic-voet 8 pins (vork-contact)	1.0000	st
.10600395	Ic-voet 14 pins (vork-contact)	3.0000	st
.10300166	Instelpot 15-turn 20k (T18)	1.0000	st
.10600432	Jack chassis break	5.0000	st
.10200310	Print Orion-10e (ldbr11sg+i/o)	1.0000	st
.10600414	Shunt 2p (mini-jumper)	1.0000	st
.10250333	Transistor BC-327/25 (pnp)	1.0000	st
.10350517	Weerstand 0E 5% 1/4W	8.0000	st
.10350832	Weerstand 1k37 1% 1/4W	1.0000	st
.10350705	Weerstand 10E 5% 1/4W	2.0000	st
.10350741	Weerstand 10k 5% 1/4W	1.0000	st
.10350713	Weerstand 47E 5% 1/4W	4.0000	st
.10350749	Weerstand 47k 5% 1/4W	1.0000	st
.10350809	Weerstand 88E7 1% 1/4W	1.0000	st
.10350717	Weerstand 100E 5% 1/4W	2.0000	st
.10350753	Weerstand 100K 5% 1/4W	4.0000	st
.10350854	Weerstand 115E 1% 1/4W	1.0000	st
.10350756	Weerstand 180K 5% 1/4W	1.0000	st
.10350847	Weerstand 182E 1% 1/4W	1.0000	st
.10350812	Weerstand 205E 1% 1/4W	1.0000	st
.10350886	Weerstand 243E 1% 1/4W	1.0000	st
.10350758	Weerstand 270k 5% 1/4W	1.0000	st
.10350892	Weerstand 340E 1% 1/4W	1.0000	st
.10350821	Weerstand 487E 1% 1/4W	1.0000	st
.10350824	Weerstand 681E 1% 1/4W	1.0000	st
.10350828	Weerstand 976E 1% 1/4W	1.0000	st
.10250340	Zenerdiode 2V4 / 400mW	1.0000	st
10650159	Bandkabel 34p (R 1.27)	30.0000	cm
10600132	Conn 34p fem bandkabel	2.0000	st
10700975	Dubbelzijdig plakband 12mm dun	9.0000	cm
10100310	Front Orion-11/B(ledbar 11sgm)	1.0000	st
10600436	Jack moer	5.0000	st
10250391	Led 5x2mm green SLB-0272PO-030	8.0000	st
10250392	Led 5x2mm red SLB-0275PO-030	3.0000	st
10700690	Platstaf 25 x 10 x 10mm	2.0000	st
10700611	Popnagel 3.0 x 6.5 blank	3.0000	st
20850210	Print bestukt Orion-10(lb11sg)	1.0000	st
10700787	Taptite M3x6 bolkoppozidr/zwrt	4.0000	st

60883250 Orion master (kompleet)

Articlecode	Description	Quantity	Unit
..10350517	Weerstand 0E 5% 1/4W	81.0000	st
.10400209	Condensator ker 4p7 R2.5	3.0000	st
.10400213	Condensator ker 10p R2.5	30.0000	st
.10400216	Condensator ker 18p R2.5	12.0000	st
.10400218	Condensator ker 27p R2.5	3.0000	st
.10400221	Condensator ker 47p R2.5	2.0000	st
.10400223	Condensator ker 68p R2.5	12.0000	st
.10400225	Condensator ker 100p R2.5	2.0000	st
.10400230	Condensator ker 270p R2.5	2.0000	st
.10401241	Condensator ker 100nF/50V R5 T	73.0000	st
.10401246	Condensator poly 1n0 R5.0	2.0000	st
.10401268	Condensator poly 1uF R5.0	11.0000	st
.10401250	Condensator poly 4n7 R5.0	2.0000	st
.10401253	Condensator poly 10n R5.0	7.0000	st
.10401260	Condensator poly 68n R5.0	4.0000	st
.10401242	Condensator poly 82n R5.0	8.0000	st
.10400267	Condensator poly 680n R7.5	2.0000	st
.10600114	Conn 5p DIN fem chassis	3.0000	st
.10600447	Connector chass 809-D 8P8C	1.0000	st
.10250342	Diode 1N4148 (signaal)	28.0000	st
.10400279	Elco 1uF / 63V radiaal R5.0	2.0000	st
.10400284	Elco 10uF / 50V radiaal R5.0	6.0000	st
.10400287	Elco 47uF / 25V radiaal R5.0	73.0000	st
.10400292	Elco 100uF / 25V radiaal R5.0	27.0000	st
.10400280	Elco 2.2uF / 50V radiaal R5.0	2.0000	st
.10400290	Elco 220uF / 25V radiaal R5.0	2.0000	st
.10250338	Fet J112 (N-channel switch)	13.0000	st
.10250017	Fet J175 (P-channel switch)	11.0000	st
.10600510	Header 2p 2.54 lock recht	10.0000	st
.10600505	Header 2p 2.54 straight	4.0000	st
.10600511	Header 3p 2.54 lock recht	1.0000	st
.10600474	Header 3p 3.96 recht	1.0000	st
.10600512	Header 4p 2.54 lock recht	11.0000	st
.10600478	Header 4p 2.54 recht	16.0000	st
.10600438	Header 16p 2.54 recht no box	2.0000	st
.10600456	Header 20p 2.54 haaks	12.0000	st
.10600140	Header 34p 2.54 haaks	3.0000	st
.10600142	Header 34p 2.54 straight	2.0000	st
.10600141	Header 64p 2.54 haaks	4.0000	st
.10250005	Ic 4093B (snand)	4.0000	st
.10250317	Ic 78L05 TO92 SGS (volt.reg)	2.0000	st
.10250325	Ic 78L12 TO92 SGS (volt.reg)	3.0000	st
.10250179	Ic DRV-134PA (SSM2142)	4.0000	st
.10250316	Ic LM-339 (comparator)	15.0000	st
.10250307	Ic NE-5532 AP TI (dual-opamp)	9.0000	st
.10250303	Ic TL-071 CN TI (single-opamp)	1.0000	st
.10250304	Ic TL-072 CP TI (dual-opamp)	11.0000	st
.10250305	Ic TL-074 CN TI (quad-opamp)	8.0000	st
.10600394	Ic-voet 8 pins (vork-contact)	25.0000	st
.10600395	Ic-voet 14 pins (vork-contact)	24.0000	st
.10300166	Instelpot 15-turn 20k (T18)	7.0000	st
.10300200	Instelpot 25-turn 20k H T93YB	1.0000	st
.10300199	Instelpot 25-turn 2k fr T93XB	1.0000	st
.10600432	Jack chassis break	22.0000	st
.10300378	Potm.16 1x 10kA log	8.0000	st
.10300372	Potm.16 1x 20kB cn lin	1.0000	st
.10300374	Potm.16 1x 20kB/1x 10kRD gain	1.0000	st
.10300370	Potm.16 2x 10kA log	3.0000	st
.10300371	Potm.16 2x 10kB cn lin	1.0000	st

60883250 Orion master (kompleet)

Articlecode	Description	Quantity	Unit
.10201052	Print Midicon-1b	1.0000	st
.10200301	Print Orion- 2b (mstr-crm)	1.0000	st
.10200302	Print Orion- 3b (mstr-comm)	1.0000	st
.10200303	Print Orion- 4C (aux1/7 & 2/8)	2.0000	st
.10200311	Print Orion-20C (ldbr25sg+i/o)	2.0000	st
.10200306	Print Orion-300A (phasesubPCB)	1.0000	st
.10200314	Print Orion-30a (phase-meter)	1.0000	st
.10200315	Print Orion-40a (mstr-aux out)	1.0000	st
.10550400	Schakelaar Alps 2p-ns (2 x om)	25.0000	st
.10550395	Schakelaar Alps 2p-ns (moment)	8.0000	st
.10550401	Schakelaar Alps 4p-ns (4 x om)	6.0000	st
.10600414	Shunt 2p (mini-jumper)	12.0000	st
.10250335	Transistor 2SB737 (pnp)	4.0000	st
.10250333	Transistor BC-327/25 (pnp)	9.0000	st
.10250332	Transistor BC-337/25 tape(npn)	8.0000	st
.10250328	Transistor BC-546B (npn)	1.0000	st
.10350517	Weerstand 0E 5% 1/4W	6.0000	st
.10350765	Weerstand 1M0 5% 1/4W	6.0000	st
.10350729	Weerstand 1k0 5% 1/4W	8.0000	st
.10350827	Weerstand 1k10 1% 1/4W	2.0000	st
.10350830	Weerstand 1k21 1% 1/4W	2.0000	st
.10350832	Weerstand 1k37 1% 1/4W	2.0000	st
.10350731	Weerstand 1k5 5% 1/4W	2.0000	st
.10350833	Weerstand 1k50 1% 1/4W	4.0000	st
.10350732	Weerstand 1k8 5% 1/4W	7.0000	st
.10350835	Weerstand 2k00 1% 1/4W	2.0000	st
.10350733	Weerstand 2k2 5% 1/4W	2.0000	st
.10350842	Weerstand 3k01 1% 1/4W	2.0000	st
.10350736	Weerstand 3k9 5% 1/4W	28.0000	st
.10350704	Weerstand 4E7 5% 1/4W	18.0000	st
.10350737	Weerstand 4k7 5% 1/4W	7.0000	st
.10350739	Weerstand 6k8 5% 1/4W	2.0000	st
.10350740	Weerstand 8k2 5% 1/4W	2.0000	st
.10350705	Weerstand 10E 5% 1/4W	6.0000	st
.10350776	Weerstand 10M0 5% 1/4W	24.0000	st
.10350741	Weerstand 10k 5% 1/4W	101.0000	st
.10351741	Weerstand 10k 1/8W 5%	4.0000	st
.10350850	Weerstand 11k0 1% 1/4W	1.0000	st
.10350742	Weerstand 12k 5% 1/4W	2.0000	st
.10350743	Weerstand 15k 5% 1/4W	36.0000	st
.10350880	Weerstand 18k7 1% 1/4W	6.0000	st
.10350745	Weerstand 22k 5% 1/4W	2.0000	st
.10350858	Weerstand 22k1 1% 1/4W	2.0000	st
.10350746	Weerstand 27k 5% 1/4W	2.0000	st
.10350861	Weerstand 28k7 1% 1/4W	18.0000	st
.10350747	Weerstand 33k 5% 1/4W	1.0000	st
.10350863	Weerstand 34k8 1% 1/4W	27.0000	st
.10350748	Weerstand 39k 5% 1/4W	2.0000	st
.10350713	Weerstand 47E 5% 1/4W	38.0000	st
.10350749	Weerstand 47k 5% 1/4W	46.0000	st
.10350751	Weerstand 68k 5% 1/4W	1.0000	st
.10350870	Weerstand 75k0 1% 1/4W	10.0000	st
.10350752	Weerstand 82k 5% 1/4W	1.0000	st
.10350809	Weerstand 88E7 1% 1/4W	2.0000	st
.10350810	Weerstand 100E 1% 1/4W	10.0000	st
.10350717	Weerstand 100E 5% 1/4W	8.0000	st
.10350753	Weerstand 100K 5% 1/4W	49.0000	st
.10350806	Weerstand 113E 1% 1/4W	2.0000	st
.10350854	Weerstand 115E 1% 1/4W	2.0000	st

60883250 Orion master (kompleet)

Articlecode	Description	Quantity	Unit
.10350805	Weerstand 133E 1% 1/4W	2.0000	st
.10350719	Weerstand 150E 5% 1/4W	2.0000	st
.10350755	Weerstand 150K 5% 1/4W	2.0000	st
.10350811	Weerstand 162E 1% 1/4W	2.0000	st
.10350720	Weerstand 180E 5% 1/4W	1.0000	st
.10350847	Weerstand 182E 1% 1/4W	2.0000	st
.10350812	Weerstand 205E 1% 1/4W	2.0000	st
.10350721	Weerstand 220E 5% 1/4W	2.0000	st
.10350757	Weerstand 220K 5% 1/4W	10.0000	st
.10350813	Weerstand 261E 1% 1/4W	2.0000	st
.10350759	Weerstand 330k 5% 1/4W	7.0000	st
.10350816	Weerstand 332E 1% 1/4W	2.0000	st
.10350724	Weerstand 390E 5% 1/4W	1.0000	st
.10350818	Weerstand 392E 1% 1/4W	2.0000	st
.10350820	Weerstand 412E 1% 1/4W	2.0000	st
.10350819	Weerstand 432E 1% 1/4W	2.0000	st
.10350821	Weerstand 487E 1% 1/4W	2.0000	st
.10350817	Weerstand 511E 1% 1/4W	2.0000	st
.10350822	Weerstand 536E 1% 1/4W	2.0000	st
.10350823	Weerstand 619E 1% 1/4W	2.0000	st
.10350864	Weerstand 649E 1% 1/4W	2.0000	st
.10350727	Weerstand 680E 5% 1/4W	2.0000	st
.10350763	Weerstand 680k 5% 1/4W	8.0000	st
.10350824	Weerstand 681E 1% 1/4W	2.0000	st
.10350825	Weerstand 768E 1% 1/4W	2.0000	st
.10350826	Weerstand 866E 1% 1/4W	2.0000	st
.10350828	Weerstand 976E 1% 1/4W	2.0000	st
.10250340	Zenerdiode 2V4 / 400mW	10.0000	st
.10250350	Zenerdiode 18V0 / 400mW	9.0000	st
10100321	Achterplaat Orion-22/b(master)	1.0000	st
10650448	Bandkabel 20p (R 1.27)	115.0000	cm
10650159	Bandkabel 34p (R 1.27)	135.0000	cm
10700288	Bout M 3 x 12 verzonken zwart	2.0000	st
10600470	Conn 20p fem bandkabel	8.0000	st
10600132	Conn 34p fem bandkabel	4.0000	st
10600525	Conn Speakon 4p chassis	1.0000	st
10600160	Conn: 2p wired 1=black 2=green	2.0000	st
10600171	Conn: 3p wrd: 1=blck/grn/red	2.0000	st
10600173	Conn: 3p wrd:2U084-018-0387	5.0000	st
10600174	Conn: 4p wired: 402-04/2*20cm	2.0000	st
10600169	Conn: 4p wrd: 2U084-017-0387	2.0000	st
10600482	Connector instrumentklem zwart	3.0000	st
10450195	Deksel SiFam 11mm gray bulk	14.0000	st
10700975	Dubbelzijdig plakband 12mm dun	15.0000	cm
10300089	Fader JP 100mm mono 10KA	2.0000	st
10100315	Front Orion master /b (4 mod)	1.0000	st
10100311	Front Orion-12 (ledbar 25sgm)	2.0000	st
10100312	Front Orion-14 (phasemeter)	1.0000	st
10500004	Isolatiekous 4.0mm rond (grys)	48.0000	cm
10600012	Kabelschoen rondstift blauw	5.0000	st
10600013	Kabelschoen stifthouder blauw	7.0000	st
10700625	Kartelring M 3 (buitenvertan)	2.0000	st
10700422	Kartelring M 4 (buitenvertan)	3.0000	st
10450198	Knop Druktoets 3.3 black-recta	1.0000	st
10450251	Knop Druktoets 3.3 black-squar	8.0000	st
10450197	Knop Druktoets 3.3 grey-rectan	2.0000	st
10450253	Knop Druktoets 3.3 grey-square	11.0000	st
10450196	Knop Druktoets 3.3 red-rectang	8.0000	st
10450252	Knop Druktoets 3.3 red-square	1.0000	st

60883250 Orion master (kompleet)

Articlecode	Description	Quantity	Unit
10450105	Knop Fader SIF GREY/black1.2x8	2.0000	st
10450103	Knop SiFam grey splined(11mm)	14.0000	st
10500683	Krimpkous 3.2>1.6 zwart	20.0000	cm
10500682	Krimpkous 6.4>3.2 zwart	6.0000	cm
10250387	Led 3mm red SLR-03A510-020	14.0000	st
10250391	Led 5x2mm green SLB-0272PO-030	44.0000	st
10250392	Led 5x2mm red SLB-0275PO-030	17.0000	st
10970912	Microfoon (condens) (talkback)	1.0000	st
10700610	Moer M 3	2.0000	st
10650490	Montagedraad 2.5 mm2 (blauw)	140.0000	cm
10650101	Montagedraad 2.5 mm2 (geel)	100.0000	cm
10650103	Montagedraad 2.5 mm2 (grijs)	80.0000	cm
10650100	Montagedraad 2.5 mm2 (rood)	70.0000	cm
10650104	Montagedraad 2.5 mm2 (zwart)	70.0000	cm
10700690	Platstaf 25 x 10 x 10mm	9.0000	st
10700636	Platstaf 60 x 10 x 10mm	3.0000	st
10700611	Popnagel 3.0 x 6.5 blank	23.0000	st
10700606	Popnagel 3x7 zwart ano alu/sta	8.0000	st
20851052	Print bestukt Midicon1	1.0000	st
20850201	Print bestukt Orion- 2 (crm)	1.0000	st
20850202	Print bestukt Orion- 3 (comm)	1.0000	st
20850203	Print bestukt Orion- 4(aux1/7)	2.0000	st
20850211	Print bestukt Orion-20(lb25sg)	2.0000	st
20850214	Print bestukt Orion-30 (phase)	1.0000	st
20850215	Print bestukt Orion-40(auxout)	1.0000	st
10550450	Schak Miyama RED OFF(ON)LEDred	1.0000	st
10700786	Taptite M3x5 verzkop/pozidr/zw	9.0000	st
10700787	Taptite M3x6 bolkoppozidr/zwrt	30.0000	st
10700681	Tywrap kort 94 mm blank	6.0000	st
10600423	XLR chass mal 3p pl.zw s	4.0000	st

60883273 Orion frame-51, incl. stands

Articlecode	Description	Quantity	Unit
.10650451	Bandkabel 64p (R 1.27)	900.0000	cm
.10700290	Bout M 6 x 45 fretbout blank	12.0000	st
.10600133	Conn 64p fem bandkabel	45.0000	st
.10700975	Dubbelzijdig plakband 12mm dun	396.0000	cm
.10150023	Kast Orion-51B kompleet+stands	1.0000	st
.10700007	Magneetstrip 8.5mm x 3mm	396.0000	cm
.10700603	Parker 2.9 x 9 zwart	5.0000	st
.10100332	Plexigl ORION-51a 3x149x1887mm	1.0000	st
.10100682	Schrijfstrook 2800x28x3mm 62st	189.5000	cm
.10700700	Schroef spaanplaat 4.5 x 30	2.0000	st
.10750043	Voorbalk Orion-51	1.0000	st
.10750040	Zijkant Orion (L + R)	1.0000	s01
10700672	Bout M 6 x 16 inbus verz.zwart	6.0000	st
10700612	Moer M 10	4.0000	st
10700626	Ring M 10 potmeter blank	4.0000	st